FAB50LBL5



Product Family	Refrigerator
Installation	Free standing
Category	Top Mount
Reference width	70 - 80 cm
Sistema Total No - Frost	Yes
Cooling type	Total No Frost - Double Cooling system
Defrost	Automatic
Hinge type	Standard
Hinge position	Left
EAN code	8017709297619

Aesthetics

Aesthetic	50's Style	**Side material**	Steel
Colour	Black	**Side colour**	Black
Design	Rounded	**Logo**	Applied
Finishing	Glossy	**Door shelves profile color**	Silver
Material	Heat-moulded	**Drawers profile color**	Silver
Handle	External	**Color of glass shelf profile**	Chrome
Handle type	Fixed	**Display**	LED
Handle colour	Chrome	**Display position**	Interno (cella frigo)
Logo colour	Chrome		

Refrigerator compartment features

Number of compartments	2	**Crisper Cover**	Yes
Compartment types	Low temperature compartment, Fruit and vegetable compartment	**Type of crisper/vegetable drawers cover**	Glass
No. of adjustable shelves	2	**Low temperature compartment**	Yes
Number of fruit and vegetables drawers	1	**Internal light in fridge**	Yes
Shelves material	Glass	**Type of internal light (fridge)**	LED

Type of crisper/vegetable drawers cover	Standard

Refrigerator Inner Door

Number of adjustable door shelves	3	**No. of bottle shelves**	1

Other Refrigerator features



Humidity Control	Yes, manual	**Fan**	Yes
MultiFlow	Yes		

Freezer compartment features

No. of shelves	1	**Type of internal light (freezer)**	LED
Internal light in freezer	Yes	**Type of shelves**	Glass

Freezer Inner Door

No. of adjustable door shelves	2

Other Freezer features



Ice maker	Manual	**Fast freezing compartment**	Yes

Other technical features



Functions display	Fast freezing, Temperature alarm
Fast freezing button	Yes
Door open alarm	Acoustic and visual
Temperature Alarm	Yes
Type of temperature control	Electronic
No. of compressors	1
Refrigerant gas type	R600a
Type of compressor	Inverter
Refrigerant Quantity (g)	62 g
Foam agent	Cyclopentane

Performance / Energy Label - Reg. 2019



Annual energy consumption	265 kWh/a	**Airborne acoustical noise emissions**	41 dB(A) re 1 pW
Energy efficiency class	E	**Temperature Rise Time**	15 h
Airborne acoustical noise emission class	C	**4 star - Freezing capacity**	8 kg/24h
Total net volume	524 l	**Climate class**	SN, N, ST, T
Sum of the volumes of the frozen compartment(s)	124 l	**EEI**	96 %
Sum of the volumes of the chill compartment(s) and the unfrozen compartment(s)	400 l		

Electrical Connection

Electrical connection rating	197 W	**Frequency (Hz)**	50/60 Hz
Current	1.1 A	**Power supply cable length**	180 cm
Voltage (V)	220-240 V	**Plug**	(F;E) Schuko

Logistic Information

Width	796 mm	**Product width with maximum doors opening**	1185 mm
Depth without handle	805 mm	**Product depth with handle**	851 mm
Height	1921 mm	**Product depth with doors open at 90°**	1470 mm

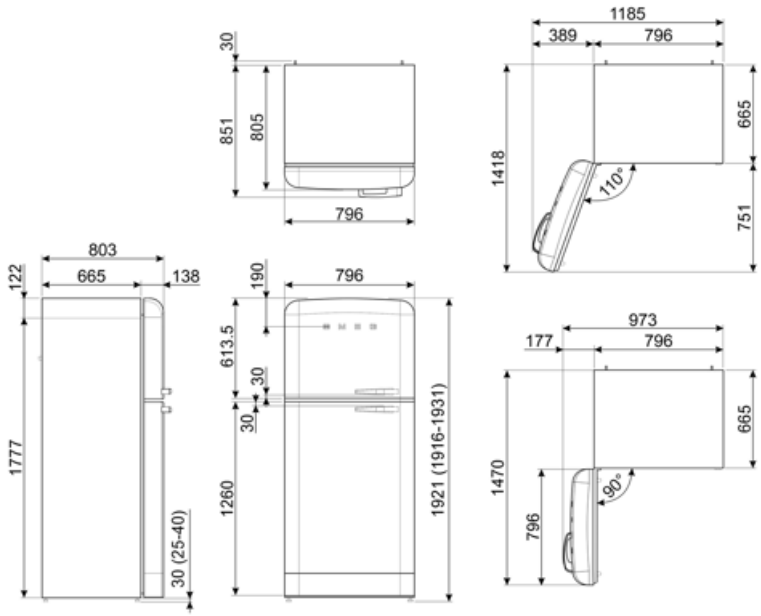
30
851
805
796
1185
389
796
665
1418
110°
751
803
665
122
138
1777
30 (25-40)
190
796
613.5
30
30
1260
1921 (1916-1931)
973
177
796
665
1470
796
90°

Alternative products



FAB50LCR5

Hinge position: Left
Cream

Symbols glossary



4 stars freezing compartment for better food preservation.



A++: Energy efficiency class A++ helps to save up to 20% energy compared to class A. Maximum performance with minimum consumption is guaranteed.



The automatic defrost system works by automatically defrosting at regular intervals eliminating the need to defrost altogether.



LED display: to show programmes, functions and options selected and the time to the end of the cycle.



Ventilated: Forced distribution of cold air in the refrigerator compartment, which allows even temperature distribution within the fridge.



Fast freezing: The fast freezing function brings the temperature of the compartment down when activated a few hours prior to usage.



LED interior lighting: is a more energy efficient and long lasting way of illuminating the interior of the appliance.



Smeg's evolution towards more intelligent and eco-friendly models has led to the choice of Inverter technology, which significantly reduces consumption.



Multiflow Cooling System: the Multiflow ventilation system allows an even distribution of cool air around the fridge cabinet.



Energy efficiency class E