FAB50RCRB5



Product Family	Refrigerator
Installation	Free Standing
Category	Top Mount
Reference width	70 - 80 cm
No-Frost system	Yes
Cooling type	Total No Frost - Double Cooling system
Defrost	Automatic
Hinge type	Standard
Hinge position	Right
EAN code	8017709299408

Aesthetics

Aesthetics	50's Style	**Side material**	Steel
Colour	Cream	**Side colour**	Cream
Design	Rounded	**Logo**	Applied
Finishing	Gloss	**Door shelves profile colour**	Silver
Material	Heat-moulded	**Drawers profile colour**	Silver
Handle	External	**Colour of glass shelf profile**	Chrome
Handle type	Fixed	**Display**	LED
Handle colour	Antique brass	**Display position**	Interior
Logo colour	Antique brass		

Refrigerator compartment features

Number of compartments	2	**Crisper Cover**	Yes
Compartment types	Low temperature compartment, Fruit and vegetable compartment	**Type of crisper/vegetable drawers cover**	Glass
No. of adjustable shelves	2	**Low temperature compartment**	Yes
Number of fruit and vegetables drawers	1	**Internal light in fridge**	Yes
Shelves material	Glass	**Type of internal light (fridge)**	LED

Type of crisper/vegetable drawers cover	Standard

Refrigerator Inner Door

Number of adjustable door shelves	3	**No. of bottle shelves**	1

Other Refrigerator features



Humidity Control	Yes	**MultiFlow**	Yes

Freezer compartment features

No. of shelves	1	**Type of internal light (freezer)**	LED
Internal light in freezer	Yes	**Type of shelves**	Glass

Freezer Inner Door

No. of adjustable door shelves	2

Other Freezer features



Ice maker	Manual	**Fast freezing compartment**	Yes

Other technical features



Functions display	Fast freezing, Temperature alarm
Fast freezing button	Yes
Door open alarm	Acoustic and visual
Temperature Alarm	Yes
Type of temperature control	Electronic
No. of compressors	1
Refrigerant gas type	R600a
Type of compressor	Inverter
Refrigerant Quantity (g)	62 g
Foam agent	Cyclopentane

Performance / Energy Label



Annual energy consumption	265 kWh/year
Energy efficiency class	E
Airborne acoustical noise emission class	C
Total volume	524 l
Sum of the volumes of the frozen compartment(s)	124 l
Sum of the volumes of the chill compartment(s) and the unfrozen compartment(s)	400 l
Noise level	41 dB(A) re 1 pW
Thaw time	15 h
4 star - Freezing capacity	8 kg/24h
Climatic class	SN, N, ST, T
EEI	96 %

Electrical Connection

Nominal power	197 W
Current	1,1 A
Voltage (V)	220-240 V
Frequency (Hz)	50/60 Hz
Power supply cable length	180 cm
Plug	(F;E) Schuko

Logistic Information

Width (mm)	796 mm
Depth without handle	805 mm
Product Height with feet	1921 mm
Product width with maximum doors opening	1185 mm
Product depth with handle	851 mm
Product depth with doors open at 90°	1470 mm

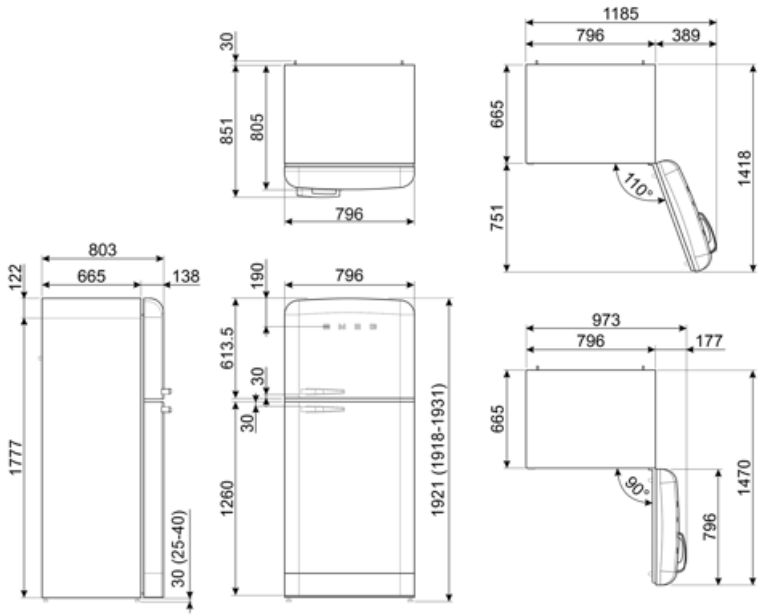
30
851
805
796
1185
796
389
665
1418
110°
751
803
665
138
122
1777
30 (25-40)
190
796
613.5
30
30
1260
1921 (1918-1931)
973
796
177
665
1470
90°
796

Alternative products



FAB50RPG5

Hinge position: Right
Pastel Green



FAB50RBL5

Hinge position: Right
Black



FAB50RPB5

Hinge position: Right
Pastel Blue



FAB50RRD5

Hinge position: Right
Red



FAB50RCR5

Hinge position: Right
Cream



FAB50RWH5

Hinge position: Right
White

Symbols glossary



4 stars freezing compartment for better food preservation.



The automatic defrost system works by automatically defrosting at regular intervals eliminating the need to defrost altogether.



A++: Energy efficiency class A++ helps to save up to 20% energy compared to class A. Maximum performance with minimum consumption is guaranteed.



Energy efficiency class E



LED display: to show programmes, functions and options selected and the time to the end of the cycle.



Fast freezing: The fast freezing function brings the temperature of the compartment down when activated a few hours prior to usage.



LED interior lighting: is a more energy efficient and long lasting way of illuminating the interior of the appliance.



Inverter technology: The evolution of Smeg's driers towards more intelligent and environmentally sustainable models has led to the choice of using Inverter technology with heat pumps, which reduces significantly energy consumption.



Air plus: keeps food fresher for longer.