FAB5LRD6



Product Family	Refrigerator
Installation	Free standing
Category	One Door
Reference width	Until 60 cm
Reference height	Until 100 cm
Cooling type	Static
Defrost	Automatic
Hinge type	Standard
Hinge position	Left
EAN code	8017709349981

Aesthetics

Aesthetic	50's Style	**Logo colour**	Chrome
Colour	Red	**Side material**	Steel
Design	Rounded	**Side colour**	Red
Finishing	Glossy	**Logo**	Applied
Material	Heat-moulded	**Door shelves profile color**	Chrome
Handle	External		
Handle type	Fixed	**Drawers profile color**	Chrome
Handle colour	Chrome	**Color of glass shelf profile**	Chrome

Refrigerator compartment features

No. of adjustable shelves	2	**Internal light in fridge**	Yes
Shelves material	Glass	**Type of internal light (fridge)**	LED
No. of lights refrigerator compartment	1		

Refrigerator Inner Door

Number of adjustable door shelves	1	**No. of bottle shelves**	1
Adjustable door shelves with wire support	Yes	**Bottle shelves with wire support**	Yes

Other technical features

Type of temperature control	Electronic
Refrigerant gas type	R600a
Type of compressor	Standard
Refrigerant Quantity (g)	19 g
Foam agent	Cyclopentane

Performance / Energy Label - Reg. 2019



Annual energy consumption	49 kWh/a
Energy efficiency class	C
Airborne acoustical noise emission class	C
Total net volume	34 l
Sum of the volumes of the chill compartment(s) and the unfrozen compartment(s)	34 l
Airborne acoustical noise emissions	36 dB(A) re 1 pW
Climate class	SN, N, ST, T
EEI	63 %

Electrical Connection

Electrical connection rating	60 W
Current	0,3 A
Voltage (V)	220-240 V
Frequency (Hz)	50 Hz
Power supply cable length	100 cm
Plug	(F;E) Schuko

Logistic Information

Width	404 mm
Depth without handle	500 mm
Height	725 mm
Product width with maximum doors opening	707 mm
Product depth with handle	570 mm
Product depth with doors open at 90°	800 mm
Spacer depth	30 mm

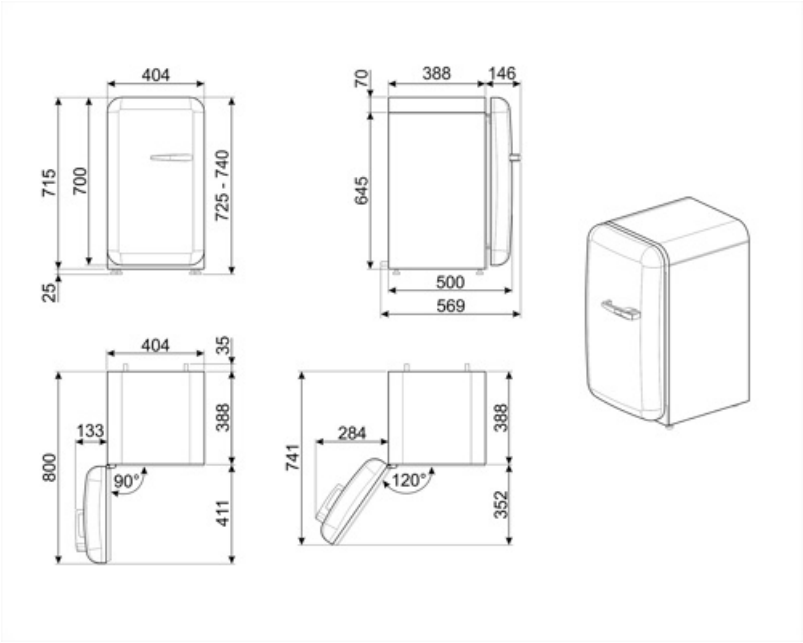
404
715
700
725 - 740
25
70
388
146
645
500
569
404
35
133
388
800
90°
411
741
284
388
120°
352

Compatible Accessories

KITCABLE90UK

Cable with IEC connector and UK plug

Alternative products



FAB5LPG6

Hinge position: Left
Pastel Green



FAB5LPK6

Hinge position: Left
Pink



FAB5LPB6

Hinge position: Left
Pastel blue



FAB5LWH6

Hinge position: Left
White



FAB5LSV6

Hinge position: Left
Silver



FAB5LOR6

Hinge position: Left
Orange



FAB5LBL6

Hinge position: Left
Black



FAB5LCR6

Hinge position: Left
Cream

Symbols glossary



The automatic defrost system works by automatically defrosting at regular intervals eliminating the need to defrost altogether.



LED interior lighting: is a more energy efficient and long lasting way of illuminating the interior of the appliance.



A+++: Appliances with this symbol can reduce energy consumption by a further 30% from the standard A energy rating.



Energy efficiency class C