# FAB5RPB6




| | |
|---|---|
| **Product Family** | Refrigerator |
| **Installation** | Free standing |
| **Category** | One Door |
| **Reference width** | Until 60 cm |
| **Reference height** | Until 100 cm |
| **Cooling type** | Static |
| **Defrost** | Automatic |
| **Hinge type** | Standard |
| **Hinge position** | Right |
| **EAN code** | 8017709349936 |

## Aesthetics

| | | | |
|---|---|---|---|
| **Aesthetic** | 50's Style | **Logo colour** | Chrome |
| **Colour** | Pastel blue | **Side material** | Steel |
| **Design** | Rounded | **Side colour** | Pastel blue |
| **Finishing** | Glossy | **Logo** | Applied |
| **Material** | Heat-moulded | **Door shelves profile color** | Chrome |
| **Handle** | External | | |
| **Handle type** | Fixed | **Drawers profile color** | Chrome |
| **Handle colour** | Chrome | **Color of glass shelf profile** | Chrome |

## Refrigerator compartment features

| | | | |
|---|---|---|---|
| **No. of adjustable shelves** | 2 | **Internal light in fridge** | Yes |
| **Shelves material** | Glass | **Type of internal light (fridge)** | LED |
| **No. of lights refrigerator compartment** | 1 | | |

## Refrigerator Inner Door

| | | | |
|---|---|---|---|
| **Number of adjustable door shelves** | 1 | **No. of bottle shelves** | 1 |
| **Adjustable door shelves with wire support** | Yes | **Bottle shelves with wire support** | Yes |

## Other technical features

| | |
|---|---|
| **Type of temperature control** | Electronic |
| **Refrigerant gas type** | R600a |
| **Type of compressor** | Standard |
| **Refrigerant Quantity (g)** | 19 g |
| **Foam agent** | Cyclopentane |

## Performance / Energy Label - Reg. 2019



| | |
|---|---|
| **Annual energy consumption** | 49 kWh/a |
| **Energy efficiency class** | C |
| **Airborne acoustical noise emission class** | C |
| **Total net volume** | 34 l |

| | |
|---|---|
| **Sum of the volumes of the chill compartment(s) and the unfrozen compartment(s)** | 34 l |
| **Airborne acoustical noise emissions** | 36 dB(A) re 1 pW |
| **Climate class** | SN, N, ST, T |
| **EEI** | 63 % |

## Electrical Connection

| | |
|---|---|
| **Electrical connection rating** | 60 W |
| **Current** | 0,3 A |
| **Voltage (V)** | 220-240 V |

| | |
|---|---|
| **Frequency (Hz)** | 50 Hz |
| **Power supply cable length** | 100 cm |
| **Plug** | (F;E) Schuko |

## Logistic Information

| | |
|---|---|
| **Width** | 404 mm |
| **Depth without handle** | 500 mm |
| **Height** | 725 mm |
| **Product width with maximum doors opening** | 707 mm |

| | |
|---|---|
| **Product depth with handle** | 570 mm |
| **Product depth with doors open at 90°** | 800 mm |
| **Spacer depth** | 30 mm |

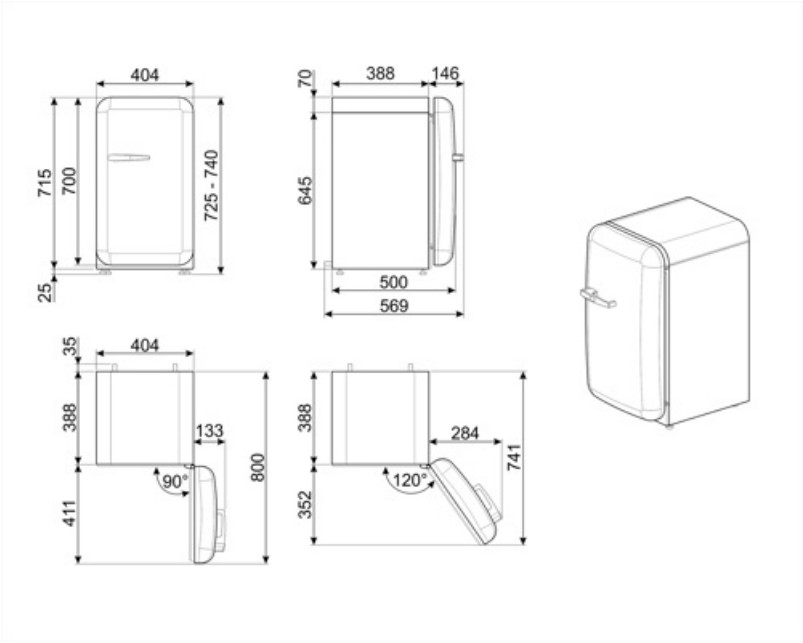
404
715
700
725 - 740
25
388
146
70
645
500
569
35
404
388
133
90°
800
411
388
284
741
120°
352

## Compatible Accessories

**KITCABLE90UK**

Cable with IEC connector and UK plug

## Alternative products



**FAB5RWH6**

**Hinge position:** Right
White



**FAB5RDUJ6**

**Hinge position:** Right
Decorated / Special



**FAB5RCR6**

**Hinge position:** Right
Cream



**FAB5RPK6**

**Hinge position:** Right
Pink



**FAB5RBL6**

**Hinge position:** Right
Black



**FAB5ROR6**

**Hinge position:** Right
Orange



**FAB5RRD6**

**Hinge position:** Right
Red



**FAB5RDGC6**

**Hinge position:** Right
Decorated / Special



**FAB5RSV6**

**Hinge position:** Right
Silver



**FAB5RPG6**

**Hinge position:** Right
Pastel Green



**FAB5RDGME6**

**Hinge position:** Right
Decorated / Special



**FAB5LCR6**

**Hinge position:** Left
Cream

**FAB5RDAPO6**

**Hinge position:**
Decorated / Special

## Symbols glossary



The automatic defrost system works by automatically defrosting at regular intervals eliminating the need to defrost altogether.




LED interior lighting: is a more energy efficient and long lasting way of illuminating the interior of the appliance.




A+++: Appliances with this symbol can reduce energy consumption by a further 30% from the standard A energy rating.




Energy efficiency class C