FAB5URYW3

Product family	Refrigerator
Installation	Free-standing
Category	Single door
Defrost	Automatic
Hinge position	Right
EAN code	8017709325527

Aesthetic

Aesthetics	Retro-style	**Side material**	Steel
Color	Yellow	**Side color**	Yellow
Finishing	Glossy	**Logo**	Applied
Material	Thermo-formed		

Refrigerator compartment features

No. of adjustable shelves	2	**Refrigerator lighting**	Yes
Type of adjustable shelves	Wire	**Refrigerator lighting**	LED
No. of lights	1		

Refrigerator Inner Door

Number of adjustable door shelves	1	**No. of bottle shelves**	1
Adjustable door bins with wire support	Yes	**Door bin with wire support**	Yes

Other technical features

Temperature setting type	Electro-mechanical
No. of compressors	1
Refrigerant gas type	R600a

Foam agent	Cyclopentane

Performance / Energy Label

Noise level	40 dB(A) re 1 pW	**Climatic class**	SN, N, ST, T

Electrical Connection

Current	0,89 A	**Power cord length**	70 7/8 "
Voltage (V)	110 V	**Plug**	(B) NEMA 5-15P
Frequency (Hz)	60 Hz		

Logistic Information

Width	15 7/8 "	**Width with doors open at 90°**	27 13/16 "
Depth without handle	19 11/16 "	**Product depth (handle included)**	22 7/16 "
Height	29 1/8 "	**Depth with door open at 90°**	31 1/2 "

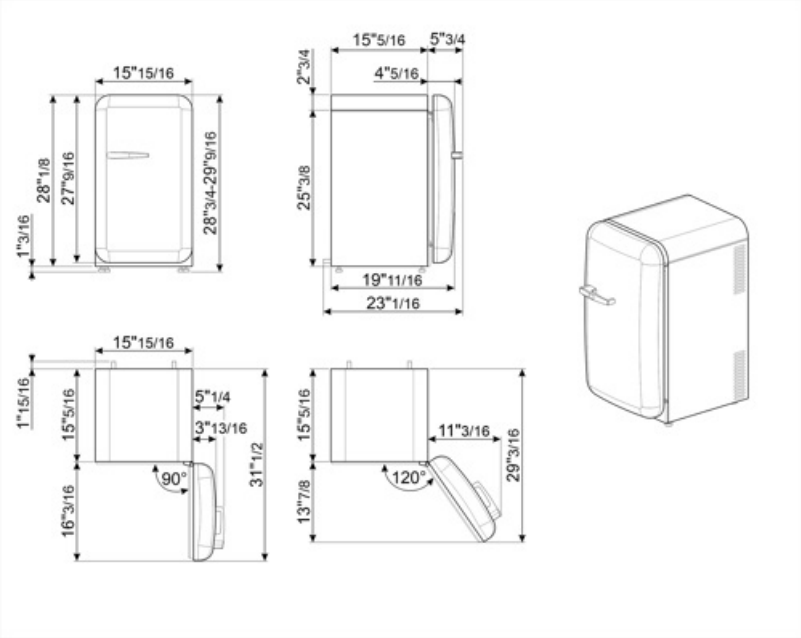

Alternative products

FAB5UROR3

Hinge position: Right
Orange

FAB5URCR3

Hinge position: Right
Cream

FAB5URPG3

Hinge position: Right
Pastel green

FAB5URDCA3

Hinge position: Right

FAB5URDGME3

Hinge position: Right

FAB5URDGC3

Hinge position: Right

FAB5URBL3

Hinge position: Right
Black

FAB5URWH3

Hinge position: Right
White

FAB5URRD3

Hinge position: Right
Red

Symbols glossary

The automatic defrost system works by automatically defrosting at regular intervals eliminating the need to defrost altogether.

LED interior lighting: is a more energy efficient and long lasting way of illuminating the interior of the appliance.

A+++: Appliances with this symbol can reduce energy consumption by a further 30% from the standard A energy rating.