FC48MDNE



Product Family	Refrigerator
Installation	Free standing
Category	Bottom Mount
Reference width	60 - 70 cm
Reference height	160 - 200 cm
Sistema Total No - Frost	Yes
Cooling type	Total No Frost
Defrost	Automatic
Hinge type	Standard
Hinge position	Right
Reversible door	Yes
EAN code	8017709343538

Aesthetics

Aesthetic	Universale	**Logo**	Silk screen
Colour	Marble Look	**Door shelves profile color**	Silver
Material	Metal sheet	**Drawers profile color**	Silver
Handle	Integrated	**Color of glass shelf profile**	Silver
Logo colour	Silver	**Display**	LED
Side material	Steel	**Display position**	Esterno (su porta)

Refrigerator compartment features

Number of compartments	2	**Crisper Cover**	Yes
Compartment types	Low temperature compartment, Fruit and vegetable compartment	**Type of crisper/vegetable drawers cover**	Glass
No. of adjustable shelves	3	**No. of lights refrigerator compartment**	2
Number of fruit and vegetables drawers	1	**Low temperature compartment**	Yes
Shelves material	Glass	**Internal light in fridge**	Yes
Type of crisper/vegetable drawers cover	Standard	**Type of internal light (fridge)**	LED

Refrigerator Inner Door

Number of adjustable door shelves	3	**No. of bottle shelves**	1

Other Refrigerator features



Humidity Control	Yes, manual	**Fan**	Yes
Accessories	Egg tray		

Freezer compartment features

Number of drawers	2	**Type of shelves**	Glass
No. of compartments with flap	1		

Other Freezer features



Accessories	manual ice-maker	**Fast freezing compartment**	Yes
Ice maker	Manual		

Other technical features



Functions display	Holiday, Fast freezing, Fast cooling, Control lock, Cooling timer
Fast freezing button	Yes
Power on lamp	Yes
Door open alarm	Yes
Type of temperature control	Electronic
No. of compressors	1
Refrigerant gas type	R600a
Type of compressor	Inverter
Refrigerant Quantity (g)	68 g
Foam agent	Cyclopentane

Performance / Energy Label - Reg. 2019



Annual energy consumption	287 kWh/a	**Airborne acoustical noise emissions**	41 dB(A) re 1 pW
Energy efficiency class	E	**Temperature Rise Time**	14 h

Airborne acoustical noise emission class	C	**4 star - Freezing capacity**	8.0 kg/24h
Total net volume	481 l	**Climate class**	SN, N, ST, T
Sum of the volumes of the frozen compartment(s)	137 l	**EEI**	100 %
Sum of the volumes of the chill compartment(s) and the unfrozen compartment(s)	344 l		

Electrical Connection

Electrical connection rating	185 W	**Frequency (Hz)**	50 Hz
		Power supply cable length	210 cm
Current	1.27 A		
Voltage (V)	220-240 V	**Plug**	(F;E) Schuko

Logistic Information

Width	700 mm	**Height**	1920 mm
Depth without handle	712 mm	**Product depth with doors open at 90°**	1390 mm

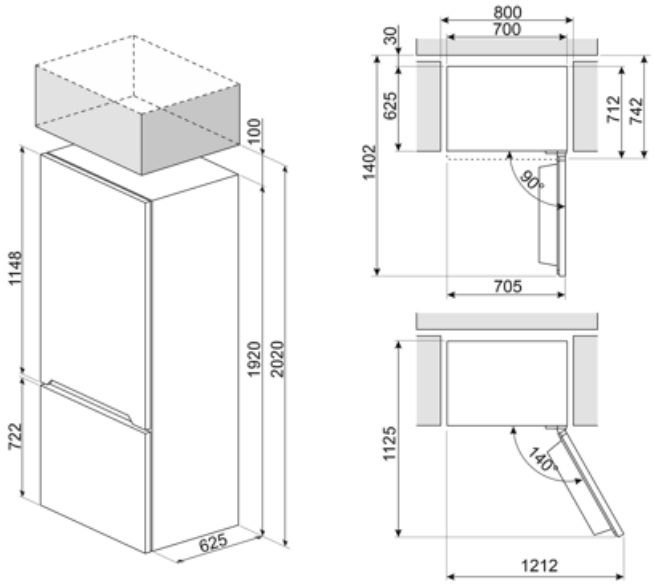

Alternative products



FC48XDNE

Hinge position: Right
Inox Look

Symbols glossary



The automatic defrost system works by automatically defrosting at regular intervals eliminating the need to defrost altogether.



LED display: to show programmes, functions and options selected and the time to the end of the cycle.



Fast freezing: The fast freezing function brings the temperature of the compartment down when activated a few hours prior to usage.



LED interior lighting: is a more energy efficient and long lasting way of illuminating the interior of the appliance.



Energy efficiency class E



Child lock: some models are fitted with a device to lock the programme/cycle so it cannot be accidentally changed.



Ventilated: Forced distribution of cold air in the refrigerator compartment, which allows even temperature distribution within the fridge.



Power saving mode: The power saving mode allows you to disable the refrigerator and keep the freezer working.



Smeg's evolution towards more intelligent and eco-friendly models has led to the choice of Inverter technology, which significantly reduces consumption.