FC48XNE



Product Family	Refrigerator
Installation	Free standing
Category	Bottom Mount
Reference width	60 - 70 cm
Reference height	160 - 200 cm
Sistema Total No - Frost	Yes
Cooling type	Total No Frost
Defrost	Automatic
Hinge type	Standard
Hinge position	Right
Reversible door	Yes
EAN code	8017709343514

Aesthetics

Aesthetic	Universale
Colour	Inox Look
Material	Steel Effect
Handle	Integrated
Logo colour	Silver
Side material	Steel

Logo	Silk screen
Door shelves profile color	Silver
Drawers profile color	Silver
Color of glass shelf profile	Silver
Display	LCD
Display position	Interno (cella frigo)

Refrigerator compartment features

Number of compartments	2
Compartment types	Low temperature compartment, Fruit and vegetable compartment
No. of adjustable shelves	3
Number of fruit and vegetables drawers	1
Shelves material	Glass
Type of crisper/vegetable drawers cover	Standard

Crisper Cover	Yes
Type of crisper/vegetable drawers cover	Glass
No. of lights refrigerator compartment	2
Low temperature compartment	Yes
Internal light in fridge	Yes
Type of internal light (fridge)	LED

Refrigerator Inner Door

Number of adjustable door shelves	3	**No. of bottle shelves**	1

Other Refrigerator features



Humidity Control	Yes, manual	**Fan**	Yes
Accessories	Egg tray		

Freezer compartment features

Number of drawers	2	**Type of shelves**	Glass
No. of compartments with flap	1		

Other Freezer features



Accessories	manual ice-maker	**Fast freezing compartment**	Yes
Ice maker	Manual		

Other technical features



Functions display	Fast freezing
Fast freezing button	Yes
Door open alarm	Acoustic
Type of temperature control	Electronic
No. of compressors	1
Refrigerant gas type	R600a
Type of compressor	Inverter
Foam agent	Cyclopentane

Performance / Energy Label - Reg. 2019



Annual energy consumption	287 kWh/a	**Sum of the volumes of the chill compartment(s) and the unfrozen compartment(s)**	344 l
Energy efficiency class	E		
Airborne acoustical noise emission class	C	**Airborne acoustical noise emissions**	41 dB(A) re 1 pW
Total net volume	481 l		

Sum of the volumes of the frozen compartment(s)	137 l	**Temperature Rise Time**	14 h
		Climate class	SN, N, ST, T
		EEI	100 %

Electrical Connection

Electrical connection rating	185 W	**Frequency (Hz)**	50 Hz
		Power supply cable length	210 cm
Current	1,27 A		
Voltage (V)	220-240 V	**Plug**	(F;E) Schuko

Logistic Information

Width	700 mm	**Height**	1920 mm
Depth without handle	712 mm	**Product depth with doors open at 90°**	1390 mm

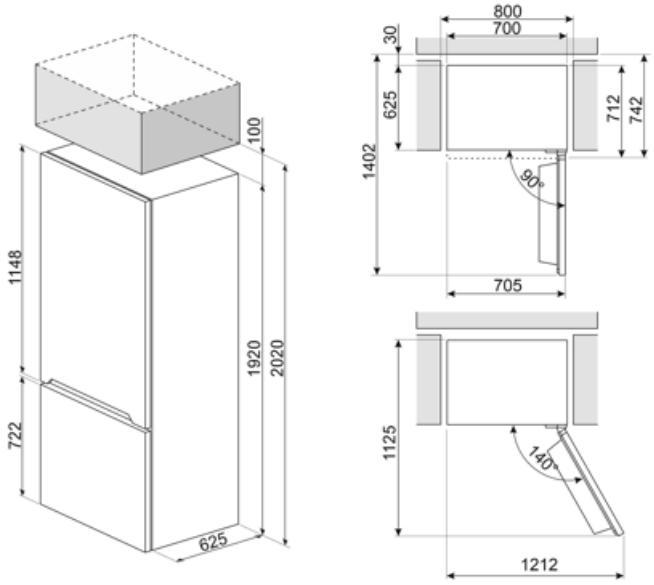

Symbols glossary



The automatic defrost system works by automatically defrosting at regular intervals eliminating the need to defrost altogether.



LCD display: to optimize performance and simplify the use of the appliance.



Fast freezing: The fast freezing function brings the temperature of the compartment down when activated a few hours prior to usage.



Smeg's evolution towards more intelligent and eco-friendly models has led to the choice of Inverter technology, which significantly reduces consumption.



Energy efficiency class E



Ventilated: Forced distribution of cold air in the refrigerator compartment, which allows even temperature distribution within the fridge.



LED interior lighting: is a more energy efficient and long lasting way of illuminating the interior of the appliance.