FMI120G

Product Family	Microwave
Category	Built-in
Installation type	Built-in
Installation	With frame
Power supply	Electric
Cooking Method	Microwave with grill
Control	Electronic



Aesthetics

Aesthetic	Linea	**Serigraphy colour**	Grey
Colour	Neptune Grey	**Door**	Full glass
Frame	Yes	**Logo**	Silk screen
Material	Glass		

Program / Functions

No. of functions	5	**Microwave**	Yes
Full grill	Yes	**Microwave + grill**	Yes
Defrost by time	Yes	**Automatic programmes**	3
Defrost by weight	Yes	**Other Microwave functions**	Memory

Controls

Display / Clock	TFT	**Opening**	Electrical button
Type of control setting	Touch control		

Options

Timer	Electronic	**Showroom demo option**	Yes

Time-setting options	End cooking	**Controls Lock / Child Safety**	Yes
End of cooking acoustic alarm	Yes	**Quick start option**	Yes
Limited Power Consumption Mode	Yes		

Technical Features



Cavity material	Stainless steel	**Grill - power**	1000 W
No. of shelves/ levels	2	**Door opening**	Side-opening
Shelves type	Rack	**Total no. of door glasses**	2
No. of lights	1	**Cooling system**	Tangential
Light type	Incandescent	**Microwave screen protection**	Yes
Light Power	20 W	**Microwave stops when door is opened**	Yes
Turntable	Yes	**Usable cavity space dimensions (HxWxD)**	210x305x280 mm
Turntable dimensions	24,5 cm	**Microwave effective power**	800 W
Grill type	Quartz		

Accessories included

Grid	1	**Frame**	Yes

Performance / Energy Label



Usable volume	20 l	**Gross volume**	21 l

Electrical Connection

Plug	Not present	**Voltage (V)**	230 V
Nominal power	1300 W	**Frequency (Hz)**	50 Hz
Current	5,2 A	**Power supply cable length**	150 cm

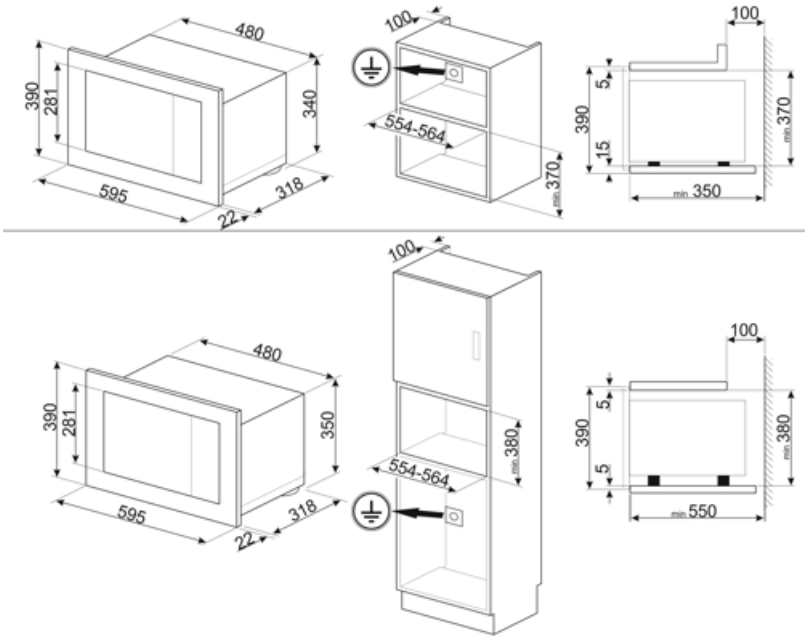
480
390
281
340
595
318
22
100
554-564
370
min
100
5
390
15
370
min
350
480
390
281
350
595
318
22
100
554-564
380
min
100
5
390
5
380
min
550

Alternative products



FMI120B3

Colour: Black

Symbols glossary



Child lock: some models are fitted with a device to lock the programme/cycle so it cannot be accidentally changed.



Defrost by time: Manual defrost function. At the end of the set duration, the function stops.



Double glazed doors: Number of glazed doors.



Microwave: Penetrating straight into the food, microwaves cook very quickly and with considerable energy savings. Suitable for cooking without fat, they are also able to thaw and heat food without altering its original appearance and aroma. The microwave function can also be combined with conventional functions with all the resulting advantages. Ideal for all types of food.



The oven cavity has 2 different cooking levels.



The capacity indicates the amount of usable space in the oven cavity in litres.



Microwave energy shortens cooking times dramatically and produces energy savings.



Defrost by weight: Automatic defrost function. You choose the type of food to defrost from the available categories (MEAT - FISH - BREAD - DESSERTS). After entering the weight of the food, the oven automatically defines the time required for proper defrosting.



Grill: Very intense heat coming only from above from a double heating element. The fan is not active. Provides excellent grilling and gratinating results. Used at the end of cooking, it gives a uniform browning to dishes.



Microwave + grill element: The use of the grill results in a perfect browning of the surface of the food. The action of microwaves allows instead of cooking in a short time the internal part of the food.



Touch controls: Easy to use touch controls allow the appliance to be programmed at the touch of a button.