# FMI320X2

| | |
|---|---|
| **Product Family** | Microwave |
| **Category** | Built-in |
| **Installation type** | Built-in |
| **Installation** | With frame |
| **Power supply** | Electric |
| **Cooking Method** | Microwave with grill |
| **Control** | Electronic |



## Aesthetics

| | | | |
|---|---|---|---|
| **Aesthetic** | Classica | **Type of steel** | Brushed |
| **Colour** | Stainless Steel | **Glass Type** | Eclipse |
| **Finishing** | Fingerproof | **Serigraphy colour** | Grey |
| **Frame** | Yes | **Door** | Full glass |
| **Material** | Stainless steel | **Logo** | Embossed |

## Program / Functions

| | | | |
|---|---|---|---|
| **No. of functions** | 5 | **Microwave** | Yes |
| **Full grill** | Yes | **Microwave + grill** | Yes |
| **Defrost by time** | Yes | **Automatic programmes** | 3 |
| **Defrost by weight** | Yes | **Other Microwave functions** | Memory |

## Controls

| | | | |
|---|---|---|---|
| **Display / Clock** | TFT | **Opening** | Electrical button |
| **Type of control setting** | Touch control | | |

## Options

| | | | |
|---|---|---|---|
| **Timer** | Electronic | **Showroom demo option** | Yes |
| **Time-setting options** | End cooking | **Controls Lock / Child Safety** | Yes |
| **End of cooking acoustic alarm** | Yes | **Quick start option** | Yes |
| **Limited Power Consumption Mode** | Yes | | |

## Technical Features




| | | | |
|---|---|---|---|
| **Cavity material** | Stainless steel | **Grill type** | Quartz |
| **No. of shelves/ levels** | 2 | **Grill - power** | 1000 W |
| **Shelves type** | Rack | **Door opening** | Side-opening |
| **No. of lights** | 1 | **Total no. of door glasses** | 2 |
| **Light type** | Incandescent | **Cooling system** | Tangential |
| **Light Power** | 20 W | **Microwave screen protection** | Yes |
| **Turntable** | Yes | **Microwave stops when door is opened** | Yes |
| **Turntable dimensions** | 24.5 cm | **Usable cavity space dimensions (HxWxD)** | 210x305x280 mm |
| **Light when door is opened** | Yes | **Microwave effective power** | 850 W |

## Accessories included

| | | | |
|---|---|---|---|
| **Grid** | 1 | **Frame** | Yes |

## Performance / Energy Label




| | | | |
|---|---|---|---|
| **Usable volume** | 20 l | **Gross volume** | 21 l |

## Electrical Connection

| | | | |
|---|---|---|---|
| **Plug** | Not present | **Voltage (V)** | 230 V |
| **Nominal power** | 1300 W | **Frequency (Hz)** | 50 Hz |
| **Current** | 5.2 A | **Power supply cable length** | 150 cm |

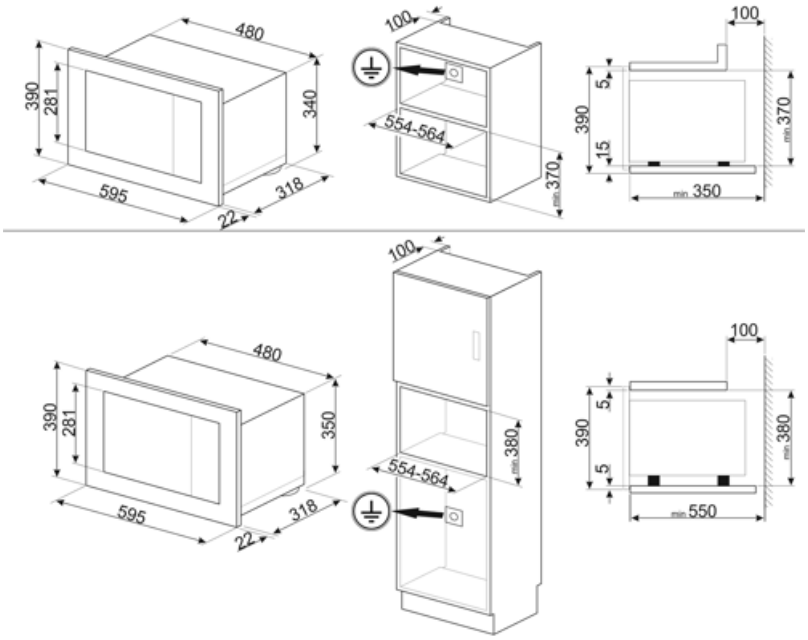
480
390
281
340
595
318
22
100
554-564
370
min
100
5
390
15
370
min
350
480
390
281
350
595
318
22
100
554-564
380
min
100
5
390
5
380
min
550

## Symbols glossary



Child lock: some models are fitted with a device to lock the programme/cycle so it cannot be accidentally changed.



Defrost by time: Manual defrost function. At the end of the set duration, the function stops.



Double glazed doors: Number of glazed doors.



Grill: Very intense heat coming only from above from a double heating element. The fan is not active. Provides excellent grilling and gratinating results. Used at the end of cooking, it gives a uniform browning to dishes.



Microwave + grill element: The use of the grill results in a perfect browning of the surface of the food. The action of microwaves allows instead of cooking in a short time the internal part of the food.



Touch controls: Easy to use touch controls allow the appliance to be programmed at the touch of a button.



Microwave energy shortens cooking times dramatically and produces energy savings.



Defrost by weight: Automatic defrost function. You choose the type of food to defrost from the available categories (MEAT - FISH - BREAD - DESSERTS). After entering the weight of the food, the oven automatically defines the time required for proper defrosting.



Fingerprint proof stainless steel: Fingerprint proof stainless steel keeps stainless steel looking as good as new.



Microwave: Penetrating straight into the food, microwaves cook very quickly and with considerable energy savings. Suitable for cooking without fat, they are also able to thaw and heat food without altering its original appearance and aroma. The microwave function can also be combined with conventional functions with all the resulting advantages. Ideal for all types of food.




The oven cavity has 2 different cooking levels.




The capacity indicates the amount of usable space in the oven cavity in litres.