FMIU020X

Product family	Microwave Oven
Category	Built-in
Installation type	Built-in
Installation	With frame
Power source	Electrical
Cooking Method	Microwave with grill
Oven controls	Electro-mechanical



Aesthetic

Color	Stainless Steel	**Silkscreen color**	Black
Finishing	Fingerprint-proof	**Door**	With frame
Frame	Yes	**Handle color**	Stainless steel effect
Material	Stainless steel	**Logo**	Embossed
Stainless steel type	Brushed		

Program / Functions

Number of functions	6	**Defrost by weight**	Yes
Large grill	Yes	**Microwave**	Yes
Pizza	Yes	**Microwave + grill**	Yes
Defrost by time	Yes	**Automatic programs**	8

Controls

Display	1 LED	**No. of controls**	1
Controls	Controls knobs / Buttons	**Control knobs**	Push-push
Opening	Button	**Controls color**	Stainless steel effect

Options

Timer	Electronic	**Child safety lock**	Yes
Time-setting options	End-of-cooking	**Quick-start option**	Yes

End-of-cooking acoustic alarm	Yes

Technical Features



Cavity material	Stainless steel	**Grill - power**	1000 W
No. of lights	1	**Total no. of door glasses**	1
Lighting	LED	**Security Thermostat**	Yes
Turntable	Yes	**Cooling system**	Tangential
Turntable dimensions	9 5/8 "	**Microwave door protection screen**	Yes
Light on when door is open	Yes	**Microwave stops when door is opened**	Yes
Grill type	Heating element	**Microwave effective power**	800 W

Accessories Included

Grid	1	**Frame**	Yes

Performance / Energy Label



Volume	21 cu. ft.

Electrical Connection

Plug	(B) NEMA 5-15P	**Voltage**	120 V
Nominal power	1350 W	**Frequency**	60 Hz
Current	11 A	**Power cord length**	59 1/16 "

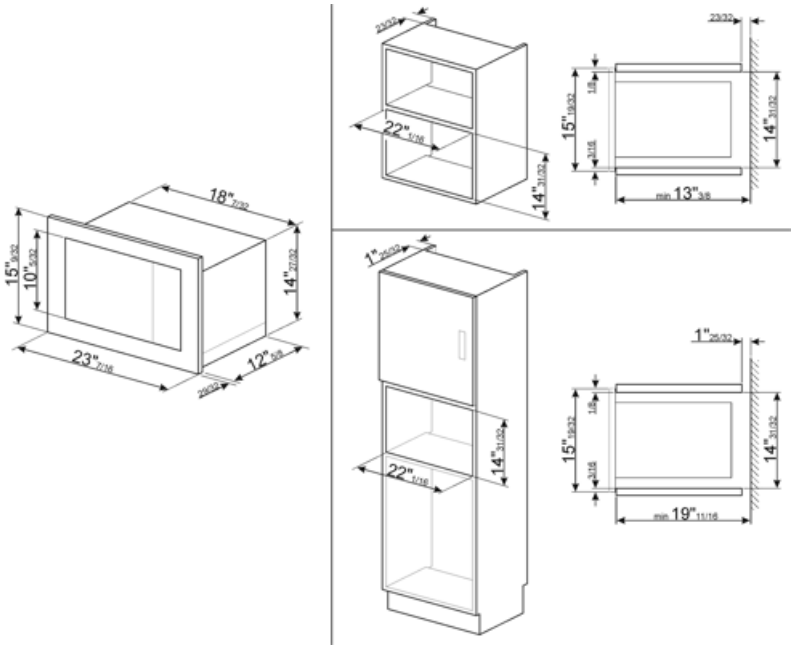
18" 7/32
15" 9/32
10" 2/32
14" 2/32
23" 7/16
12" 5/8
23/32
22" 1/16
14" 31/32
15" 9/32
1 1/8
3/16
14" 31/32
min 13" 3/8
1" 25/32
22" 1/16
14" 31/32
15" 9/32
1 1/8
3/16
14" 31/32
min 19" 11/16

Symbols glossary



Child lock: some models are fitted with a device to lock the programme/cycle so it cannot be accidentally changed.



Defrost by time: with this function the time of thawing of foods are determined automatically.



Fingerprint proof stainless steel: Fingerprint proof stainless steel keeps stainless steel looking as good as new.



Microwave: Penetrating straight into the food, microwaves cook very quickly and with considerable energy savings. Suitable for cooking without fat, they are also able to thaw and heat food without altering its original appearance and aroma. The microwave function can also be combined with conventional functions with all the resulting advantages. Ideal for all types of food.



Pizza microwave: This function cooks pizza quicker thanks to the microwaves. To optimize the final result, use the function combined with the Chef plate



The capacity indicates the amount of usable space in the oven cavity in litres.



Microwave energy shortens cooking times dramatically and produces energy savings.



Defrost by weight: With this function the defrosting time is determined



Grill element: Using of grill gives excellent results when cooking meat of medium and small portions, especially when combined with a rotisserie (where possible). Also ideal for cooking sausages and bacon.



Microwave + grill element: The use of the grill results in a perfect browning of the surface of the food. The action of microwaves allows instead of cooking in a short time the internal part of the food.



Side lights: Two opposing side lights increase visibility inside the oven.