FQ55FNDE



Product Family	Refrigerator
Installation	Free Standing
Category	2 Doors & 2 Drawers
Reference width	Higher than 80 cm
Reference height	160 - 200 cm
No-Frost system	Yes
Cooling type	No frost
Defrost	Automatic
Hinge type	Standard
EAN code	8017709337650

Aesthetics

Aesthetics	Universal	**Side material**	Steel
Colour	Black	**Side colour**	Black
Design	Flat	**Logo**	Applied
Finishing	Gloss	**Door shelves profile colour**	Silver
Material	Metal sheet	**Drawers profile colour**	Silver
Handle	External	**Colour of glass shelf profile**	Silver
Handle type	Fixed	**Display**	LED
Handle colour	Black	**Display position**	External (on door)
Logo colour	Chrome		

Refrigerator compartment features

Number of compartments	2	**Type of crisper/vegetable drawers cover**	On sliding rails
Compartment types	Fruit and vegetable compartment	**Crisper Cover**	Yes
No. of adjustable shelves	3	**Type of crisper/vegetable drawers cover**	Glass
Number of fruit and vegetables drawers	2	**Internal light in fridge**	Yes
Shelves material	Glass	**Type of internal light (fridge)**	LED

Refrigerator Inner Door

No. of door shelves with transparent cover	2	**No. of bottle shelves**	2
Number of adjustable door shelves	4	**Bottle shelves with wire support**	Yes
Adjustable door shelves with wire support	Yes		

Other Refrigerator features



Accessories	Egg tray	**Fan**	Yes
Natural Plus Blu Light	Yes	**Antibacterial odour filter**	Yes
MultiFlow	Yes		

Freezer compartment features

Number of drawers	2

Other Freezer features



Accessories	1 ice box	**Fast freezing compartment**	Yes

Other technical features

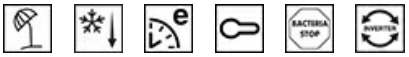

Functions display	Holiday, Fast freezing, Fast cooling, ECO, Control lock
Fast freezing button	Yes
Door open alarm	Yes
Temperature Alarm	Yes
Antibacterial Gasket	Yes
Type of temperature control	Electronic
No. of compressors	1
Refrigerant gas type	R600a
Type of compressor	Inverter
Foam agent	Cyclopentane

Performance / Energy Label



Annual energy consumption	302 kWh/year	**Noise level**	35 dB(A) re 1 pW
Energy efficiency class	E	**Thaw time**	18 h
Airborne acoustical noise emission class	B	**4 star - Freezing capacity**	10.7 kg/24h
Total volume	539 l	**Climatic class**	SN, N, ST

Sum of the volumes of the frozen compartment(s)	152 l	**EEI**	100 %
Sum of the volumes of the chill compartment(s) and the unfrozen compartment(s)	387 l		

Electrical Connection

Nominal power	160 W	**Frequency (Hz)**	50 Hz
Current	0.9 A	**Power supply cable length**	240 cm
Voltage (V)	220-240 V	**Plug**	(F;E) Schuko

Logistic Information

Width (mm)	840 mm	**Product width with maximum doors opening**	1326 mm
Depth without handle	790 mm	**Product depth with handle**	780 mm
Product Height with feet	1825 mm	**Product depth with doors open at 90°**	1072 mm

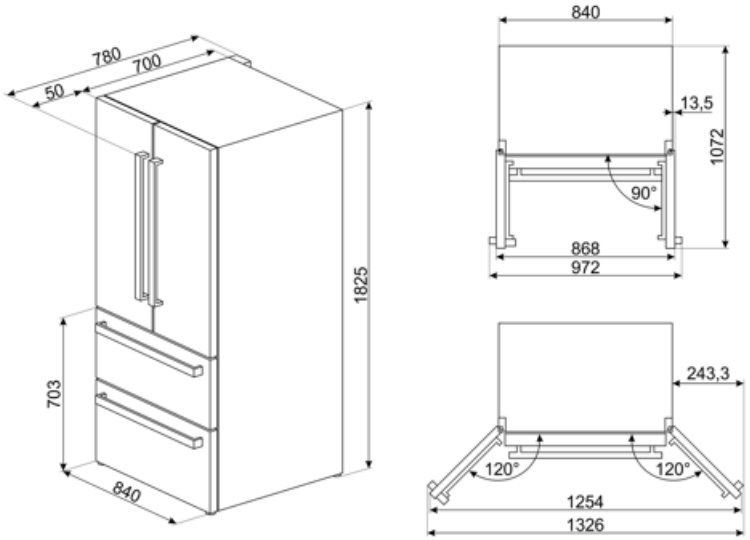

Symbols glossary



The automatic defrost system works by automatically defrosting at regular intervals eliminating the need to defrost altogether.



Child lock: some models are fitted with a device to lock the programme/cycle so it cannot be accidentally changed.



LED display: to show programmes, functions and options selected and the time to the end of the cycle.



Ventilated: Forced distribution of cold air in the refrigerator compartment, which allows even temperature distribution within the fridge.



Power saving mode: The power saving mode allows you to disable the refrigerator and keep the freezer working.



Inverter technology: The evolution of Smeg's driers towards more intelligent and environmentally sustainable models has led to the choice of using Inverter technology with heat pumps, which reduces significantly energy consumption.



Natural Plus Blu Light: This unique Natural Plus Blu Light system works with nature to increase the storage time of fruit and vegetables.



Antibacterial treatment: antibacterial treatment to ensure better hygiene



Energy efficiency class E



Economical mode: Analyzes fridge functioning during the activation and optimizes the operating cycle in order to reduce power consumption.



Fast freezing: The fast freezing function brings the temperature of the compartment down when activated a few hours prior to usage.



LED interior lighting: is a more energy efficient and long lasting way of illuminating the interior of the appliance.



Air plus: keeps food fresher for longer.