FQ55FXDE



Product Family	Refrigerator
Installation	Free standing
Category	2 Doors & 2 Drawers
Reference width	Higher than 80 cm
Reference height	160 - 200 cm
Sistema Total No - Frost	Yes
Cooling type	Total No Frost
Defrost	Automatic
Hinge type	Standard
EAN code	8017709337643

Aesthetics

Aesthetic	Universale	**Logo colour**	Chrome
Colour	Inox Look	**Side material**	Steel
Design	Flat	**Side colour**	Silver
Handle	External	**Logo**	Applied
Handle type	Fixed	**Display**	LED
Handle colour	Stainless steel	**Display position**	Esterno (su porta)

Refrigerator compartment features

Number of compartments	2	**Type of crisper/vegetable drawers cover**	Standard
Compartment types	Fruit and vegetable compartment	**Crisper Cover**	Yes
No. of adjustable shelves	3	**Type of crisper/vegetable drawers cover**	Glass
Number of fruit and vegetables drawers	2	**Internal light in fridge**	Yes
Shelves material	Glass	**Type of internal light (fridge)**	LED

Refrigerator Inner Door

No. of door shelves with transparent cover	2	**No. of bottle shelves**	2

Number of adjustable door shelves	4	**Bottle shelves with wire support**	Yes
Adjustable door shelves with wire support	Yes		

Other Refrigerator features

Accessories	Egg tray	**Fan**	Yes
Natural Plus Blu Light	Yes	**Ionizer**	Yes
MultiFlow	Yes	**Antibacterial odour filter**	Yes

Freezer compartment features

Number of drawers	2

Other Freezer features

Accessories	1 ice box	**Fast freezing compartment**	Yes

Other technical features

Functions display	Holiday, Fast freezing, Fast cooling, ECO, Control lock, Temperature alarm
Fast freezing button	Yes
Door open alarm	Yes
Temperature Alarm	Yes
Antibacterial Gasket	Yes
Type of temperature control	Electronic
No. of compressors	1
Refrigerant gas type	R600a
Type of compressor	Inverter
Foam agent	Cyclopentane

Performance / Energy Label - Reg. 2019

Annual energy consumption	302 kWh/a	**Airborne acoustical noise emissions**	35 dB(A) re 1 pW
Energy efficiency class	E	**Temperature Rise Time**	18 h
Airborne acoustical noise emission class	B	**4 star - Freezing capacity**	10,7 kg/24h
Total net volume	539 l		

Sum of the volumes of the frozen compartment(s)	152 l	**Climate class**	SN, N, ST
		EEI	100 %
Sum of the volumes of the chill compartment(s) and the unfrozen compartment(s)	387 l		

Electrical Connection

Electrical connection rating	160 W	**Frequency (Hz)**	50 Hz
		Power supply cable length	240 cm
Current	0,9 A		
Voltage (V)	220-240 V	**Plug**	(F;E) Schuko

Logistic Information

Width	840 mm	**Height**	1825 mm
Depth without handle	790 mm		

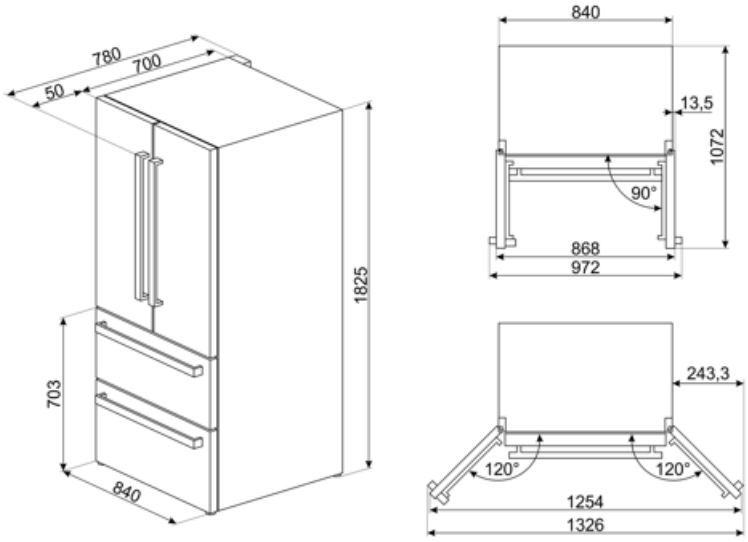

Symbols glossary



Smeg Active Ion system improves the quality of the air inside the cell. Thanks to the generation of negatively charged ions released inside the fridge Active Ion system neutralizes unpleasant dust.



Antibacterial treatment: antibacterial treatment to ensure better hygiene.



Energy efficiency class E



Economical mode: Analyzes fridge functioning during the activation and optimizes the operating cycle in order to reduce power consumption.



Fast freezing: The fast freezing function brings the temperature of the compartment down when activated a few hours prior to usage.



LED interior lighting: is a more energy efficient and long lasting way of illuminating the interior of the appliance.



Multiflow Cooling System: the Multiflow ventilation system allows an even distribution of cool air around the fridge cabinet.



The automatic defrost system works by automatically defrosting at regular intervals eliminating the need to defrost altogether.



Child lock: some models are fitted with a device to lock the programme/cycle so it cannot be accidentally changed.



LED display: to show programmes, functions and options selected and the time to the end of the cycle.



Ventilated: Forced distribution of cold air in the refrigerator compartment, which allows even temperature distribution within the fridge.



Power saving mode: The power saving mode allows you to disable the refrigerator and keep the freezer working.



Smeg's evolution towards more intelligent and eco-friendly models has led to the choice of Inverter technology, which significantly reduces consumption.



Natural Plus Blu Light: This unique Natural Plus Blu Light system works with nature to increase the storage time of fruit and vegetables.