FQ60XE



Product Family	Refrigerator
Installation	Free standing
Category	4 Doors
Reference width	Higher than 80 cm
Reference height	160 - 200 cm
Sistema Total No - Frost	Yes
Cooling type	Total No Frost - Double Cooling system
Defrost	Automatic
Hinge type	Standard
EAN code	8017709337667

Aesthetics

Aesthetic	Universale	**Logo colour**	Chrome
Colour	Inox Look	**Side material**	Steel
Design	Flat	**Side colour**	Silver
Finishing	Fingerproof	**Logo**	Applied
Material	Steel Effect	**Door shelves profile color**	Silver
Door steel type	Finger proof	**Drawers profile color**	Silver
Handle	External	**Color of glass shelf profile**	Silver
Handle type	Fixed	**Display**	LED
Handle colour	Stainless steel	**Display position**	Interno (sul Top)

Refrigerator compartment features

Number of compartments	3	**Crisper Cover**	Yes
Compartment types	Low temperature compartment, Fruit and vegetable compartment	**Type of crisper/vegetable drawers cover**	Glass
No. of adjustable shelves	2	**No. of lights refrigerator compartment**	2
Number of fruit and vegetables drawers	2	**Low temperature compartment**	Yes
Shelves material	Glass	**Internal light in fridge**	Yes
		Type of internal light (fridge)	LED

Type of crisper/vegetable drawers cover	On sliding rails

Refrigerator Inner Door

No. of door shelves with transparent cover	2	**No. of bottle shelves**	2
Number of adjustable door shelves	2		

Other Refrigerator features



Humidity Control	Yes, manual	**MultiFlow**	Yes
Accessories	2 sliders, Egg tray	**Fan**	Yes
Natural Plus Blu Light	Yes		

Freezer compartment features

Number of drawers	4	**Type of shelves**	Glass
No. of shelves	2		

Other Freezer features



Fast freezing compartment	Yes

Other technical features



Functions display	Holiday, Fast freezing, Fast cooling, ECO, Control lock
Door open alarm	Yes
Type of temperature control	Electronic
No. of compressors	1
Refrigerant gas type	R600a
Type of compressor	Inverter
Foam agent	Cyclopentane

Performance / Energy Label - Reg. 2019



Annual energy consumption	338 kWh/a	**Airborne acoustical noise emissions**	37 dB(A) re 1 pW
Energy efficiency class	E	**Temperature Rise Time**	10 h

Airborne acoustical noise emission class	C	**4 star - Freezing capacity**	4,6 kg/24h
Total net volume	541 l	**Freezer (4-star) (1) - Freezing capacity**	4,6 kg/24h
Sum of the volumes of the frozen compartment(s)	165 l	**Climate class**	SN, N, ST, T
Sum of the volumes of the chill compartment(s) and the unfrozen compartment(s)	376 l	**EEI**	100 %
Total gross volume	626 l		

Electrical Connection

Electrical connection rating	200 W	**Frequency (Hz)**	50 Hz
Current	0,8 A	**Power supply cable length**	240 cm
Voltage (V)	220-240 V	**Plug**	(F;E) Schuko

Logistic Information

Width	908 mm	**Product depth with handle**	750 mm
Height	1820 mm	**Product depth with doors open at 90°**	1074 mm
Product width with maximum doors opening	1533 mm		

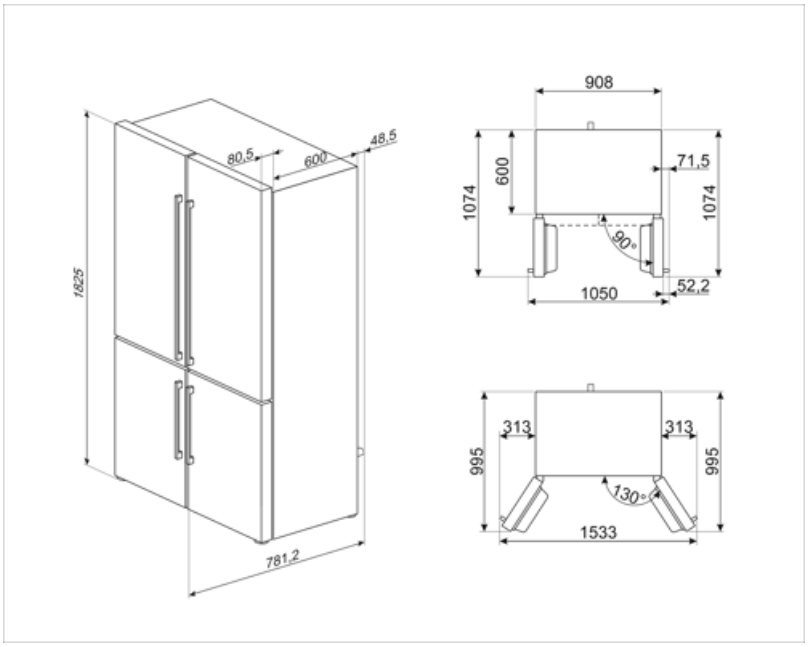

Symbols glossary



The automatic defrost system works by automatically defrosting at regular intervals eliminating the need to defrost altogether.



LED display: to show programmes, functions and options selected and the time to the end of the cycle.



Ventilated: Forced distribution of cold air in the refrigerator compartment, which allows even temperature distribution within the fridge.



Fingerprint proof stainless steel: Fingerprint proof stainless steel keeps stainless steel looking as good as new.



LED interior lighting: is a more energy efficient and long lasting way of illuminating the interior of the appliance.



Multiflow Cooling System: the Multiflow ventilation system allows an even distribution of cool air around the fridge cabinet.



Energy efficiency class E



Child lock: some models are fitted with a device to lock the programme/cycle so it cannot be accidentally changed.



Economical mode: Analyzes fridge functioning during the activation and optimizes the operating cycle in order to reduce power consumption.



Fast freezing: The fast freezing function brings the temperature of the compartment down when activated a few hours prior to usage.



Power saving mode: The power saving mode allows you to disable the refrigerator and keep the freezer working.



Smeg's evolution towards more intelligent and eco-friendly models has led to the choice of Inverter technology, which significantly reduces consumption.



Natural Plus Blu Light: This unique Natural Plus Blu Light system works with nature to increase the storage time of fruit and vegetables.