FZU18L



Product Family	Freezers
Installation	Built-in
Category	Single door
Reference width	Until 60 cm
Reference height	Higher than 200 cm
Cooling type	No Frost
Hinge type	Door on door
Hinge position	Left

Aesthetics

Aesthetic	Panel-ready	**Drawers profile color**	Bianco
Material	Steel	**Display**	TFT
Side material	Metal	**Display porition**	Interno (sul Top)

Freezer compartment features

Internal light in freezer	Yes
Number of shelves	2
Type of internal light (freezer)	LED
Number of drawers	3

Other Freezer features

Warehouse availability first date	Automatico

Other technical features

Freezer compartment accessories	Linking Kit	**Type of temperature control**	Electronic
Functions display	Holiday, Fast Feezing, MultiZone, Sabbath	**No. of compressors**	1
		Refrigerant gas type	R600a
Fast freezing button	Yes		

Power on lamp	Yes	**Type of compressor**	Inverter
Door open alarm	Yes	**Refrigerant Quantity (gr)**	59 oz
Temperature alarm	Yes	**Metal panel on the back of the fridge**	Metal
Antibacterial Gasket	Yes		

Performance / Energy Label - Reg. 2019

Annual energy consumption	480 kWh/year	**Climate class**	SN, T
Total net volume	61.6 gal		

Electrical Connection

Current	2,5 A	**Power supply cable length**	78 3/4 "
Voltage	115 V	**Plug**	(B) NEMA 5-15P
Frequency (Hz)	60 Hz		

Logistic Information

Width	17 3/4 "	**Depth of the built-in niche**	24 "
Width of the built-in niche	18 "	**Height of the built-in niche**	84 "
Depth without handle	24 "	**Product width with maximum doors opening**	21 "
Height, maximum value	83 7/16 "	**Product depth with doors open at 90°**	40 13/16 "

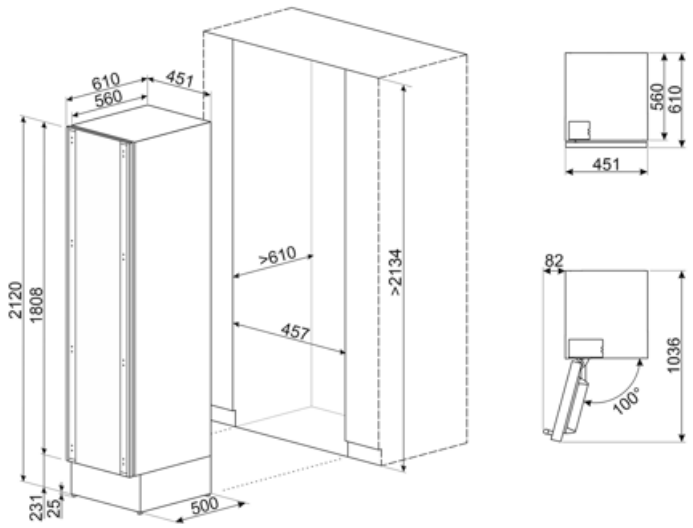

Compatible Accessories

RSFZLK

Symbols glossary



Fast freezing: The fast freezing function brings the temperature of the compartment down when activated a few hours prior to usage.



LED interior lighting: is a more energy efficient and long lasting way of illuminating the interior of the appliance.



Multizone: Multizone compartment can be used as a refrigerator or a freezer compartment. Depending on your needs and eating habbits, you can select settings, program the temperature using.



Power saving mode: The power saving mode allows you to disable the refrigerator and keep the freezer working.



Smeg's evolution towards more intelligent and eco-friendly models has led to the choice of Inverter technology, which significantly reduces consumption.



No Frost: The No Frost and Frost free systems prevent ice from forming so that no defrosting is required.