FZU18L



Product family	Freezer
Installation	Built-in
Category	Single Door
Reference width	Until 60 cm
Reference height	Higher than 200 cm
Cooling type	No-frost
Hinge	Door-to-door
Hinge position	Left
Reversible door	No

Aesthetic

Aesthetics	Panel-ready	**Drawers profile color**	White
Material	Steel	**Display**	TFT
Side material	Metal	**Display position**	Internal (on top)

Freezer features

Freezer lighting	Yes
Number of shelves	2
Freezer lighting	LED
Number of drawers	3

Other Freezer features

Ice maker	Automatic

Other technical features

Freezer accessories	Linking Kit	**Type of temperature control**	Electronic
Display functions	Holiday, Fast-freezing, MultiZone, Sabbath	**No. of compressors**	1
Fast-freezing button	Yes	**Refrigerant gas type**	R600a
Power-on light	Yes	**Type of compressor**	Inverter
Door-open Alarm	Yes	**Refrigerant quantity**	59 oz

Temperature Alarm	Yes	**Metal panel on the back of the fridge**	Metal
Antibacterial Gasket	Yes		

Performance / Energy Label

Annual energy consumption	480 kWh/year	**Climatic class**	SN, T
Total net volume	8.23 cu. ft.		

Electrical Connection

Current	2,5 A	**Power cord length**	78 3/4 "
Voltage	115 V	**Plug**	(B) NEMA 5-15P
Frequency (Hz)	60 Hz		

Logistic Information

Width	17 3/4 "	**Built-in niche depth**	24 "
Built-in niche width	18 "	**Built-in niche height**	84 "
Depth without handle	24 "	**Width with doors open at 90°**	21 "
Height	83 7/16 "	**Product depth with doors open at 90°**	40 13/16 "

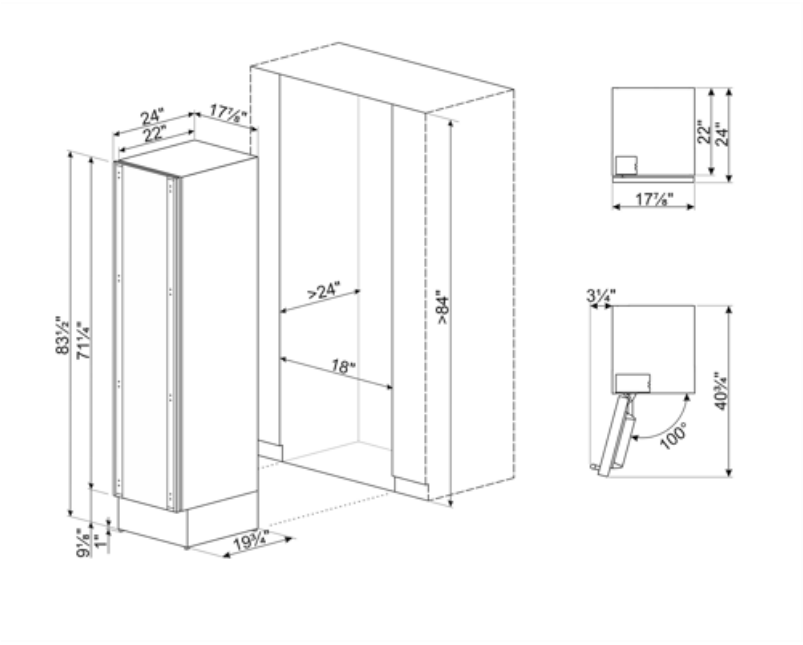

Compatible Accessories

RSFZLK

Symbols glossary



Fast freezing: The fast freezing function brings the temperature of the compartment down when activated a few hours prior to usage.



LED interior lighting: is a more energy efficient and long lasting way of illuminating the interior of the appliance.



Multizone: Multizone compartment can be used as a refrigerator or a freezer compartment. Depending on your needs and eating habbits, you can select settings, program the temperature using.



Power saving mode: The power saving mode allows you to disable the refrigerator and keep the freezer working.



Inverter technology: The evolution of Smeg's driers towards more intelligent and environmentally sustainable models has led to the choice of using Inverter technology with heat pumps, which reduces significantly energy consumption.



No Frost: The No Frost and Frost free systems prevent ice from forming so that no defrosting is required.