FZU36L



Product Family	Freezers
Installation	Built-in
Category	Single door
Cooling type	No Frost
Hinge type	Door on door
Hinge position	Left

Aesthetics

Aesthetic	Universale	**Side material**	Metal
Material	Steel	**Display**	TFT
Door steel type	Normal	**Display porition**	Interno (sul Top)

Freezer compartment features

Internal light in freezer	Yes
Number of shelves	2
Type of internal light (freezer)	Incandescent light
Number of drawers	4

Other Freezer features

Warehouse availability first date	Automatico

Other technical features

Freezer compartment accessories	Linking Kit	**Type of temperature control**	Electronic
Functions display	Holiday, Fast Feezing	**No. of compressors**	1
Fast freezing button	Yes	**Refrigerant gas type**	R600a
Power on lamp	Yes	**Type of compressor**	Inverter
Temperature alarm lamp	Yes		

		Refrigerant Quantity (gr)	85 oz
Door open alarm	Yes	**Foam agent**	Cyclopentane
Temperature alarm	Yes		

Performance / Energy Label - Reg. 2019

Annual energy consumption	670 kWh/year	**Climate class**	SN, T
Total net volume	150.6 gal		

Electrical Connection

Current	2,5 A	**Power supply cable length**	78 3/4 "
Voltage	115 V	**Plug**	(B) NEMA 5-15P
Frequency (Hz)	60 Hz		

Logistic Information

Width	35 7/8 "	**Height of the built-in niche**	84 "
Width of the built-in niche	36 "	**Product width with maximum doors opening**	41 3/8 "
Depth without handle	24 7/16 "	**Product depth with handle**	28 15/16 "
Height, maximum value	83 7/16 "	**Product depth with doors open at 90°**	58 9/16 "
Depth of the built-in niche	25 "		

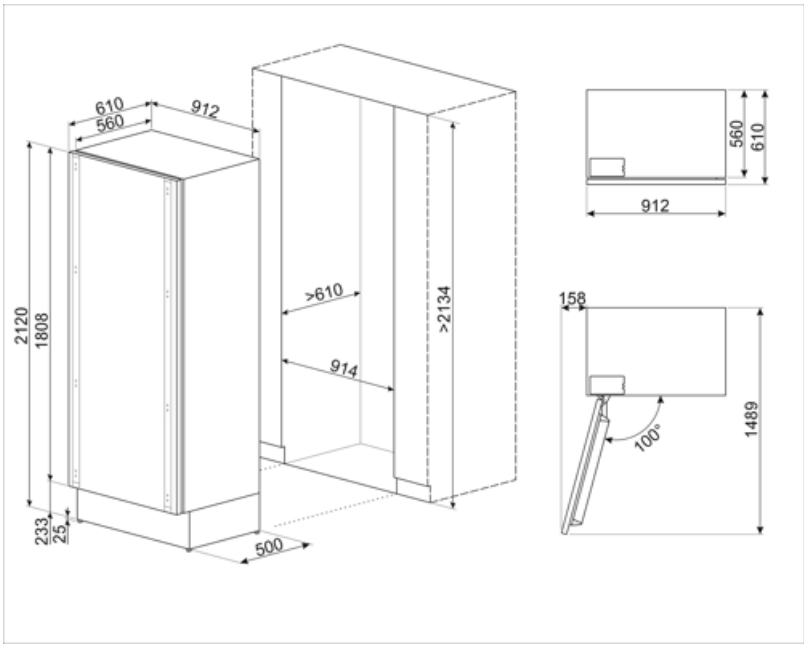

Compatible Accessories

RSFZLK

Symbols glossary



Fast freezing: The fast freezing function brings the temperature of the compartment down when activated a few hours prior to usage.



Smeg's evolution towards more intelligent and eco-friendly models has led to the choice of Inverter technology, which significantly reduces consumption.



Power saving mode: The power saving mode allows you to disable the refrigerator and keep the freezer working.



No Frost: The No Frost and Frost free systems prevent ice from forming so that no defrosting is required.