HOBD182DG

Product Family	Hob
Built-in	Ultra-low profile or Fully Flushed
Dimensions	80 cm
Power supply	Electric
Type	Induction with integrated hood
Extraction	Expulsion
Electronic control	Yes
EAN code	8017709331856
Energy efficiency class (EEC)	A++



Aesthetics

Aesthetics	Linea
Colour	Neptune Grey
Finishing	Glass
Material	Glass
Glass Type	Ceramic
Glass edge	Straight edge
Pan stands	Cast iron
Type of control setting	EVO Slider
Slider	Yes
Slider	White
Control knobs position	Front
Logo	Silk screen
Serigraphy colour	Grey

Program / Functions

No. of induction cook zones	4
Time-setting options	Automatic switch-off
No. of cooking zones with booster	4
No. of Flexible zones	2
Main on/off switch	Yes
Power levels	9
Total no. of cook zones	4

Options

Multizone Option	Yes	**Residual time indicator**	Yes
Flexible Zone Type	MultiZone	**Limited Power Consumption Mode**	Yes advance
Standard cut out	482-483x765-766 mm	**Limited Power Consumption Mode in W**	2800, 3500, 4500, 7400 W
Keep warm automatic function	Yes	**Show Room Demo Option**	Yes
End cooking timer	4	**Control Lock / Child Safety**	Yes
Pause option	Yes	**Cleaning option**	Yes
Minute minder	1	**Quick start**	Yes
End of cooking acoustic alarm	Yes	**Rapid level selection**	Yes

Technical Features

Front left - Induction - Multizone - 2.10 kW - Booster 3.00 kW - 21.0x19.0 cm
Rear left - Induction - multizone - 2.10 kW - Booster 3.00 kW - 21.0x19.0 cm
Rear right - 2.10 kW - Booster 3.00 kW - 21.0x19.0 cm
Front right - 2.10 kW - Booster 3.00 kW - 21.0x19.0 cm
Multizone left - Booster 3.70 kW - 39.0x21.0 cm
Multizone right - Booster 3.70 kW - 39.0x21.0 cm

Automatic setting according to pan dimension	Yes	**Automatic switch off when overflow**	Yes
Automatic pan detection	Yes, min 9 cm	**Residual heat indicator**	Yes
Permanent Automatic Pot Detection with indication of the relative control	Yes	**Protection against accidental start up**	Yes

Accessories Included

Other accessories	Extraction and Filtering Kit inc tubes and Charcoal filter

Electrical Connection

Nominal power (W)	7620 W	**Frequency (Hz)**	50/60 Hz
Current	33 A	**Power supply cable length**	120 cm
Voltage (V)	220-240 V	**Terminal Box**	6 poles
Voltage 2 (V)	380-415 V	**Plug**	No

Type of electric cable supplied	Yes, Single and Double phase

Controls (hood)

Hood control setting	Touch control	**Display**	Yes
Led colour	White		

Programs / Functions (hood)

Delay function	Yes	**Hood time setting**	Delay
No. of speeds	8	**Other options**	Kit for Recirculation and Extraction included
Intensive speed	2		
Other functions	AUTOVENT	**Auto-Vent**	yes

Technical Features (Hood)

Free outlet maximum capacity	750 m³/h	**Anti-grease filters**	Stainless steel
Motor power	220 W	**Charcoal filters included**	YES, regenerable
No. of filters	1	**Filter replacement indicator**	Yes

Performance / Energy Label (hood)

Fluid Dynamic Efficiency (FDE)	37,60	**Airbourne acouistical A-weighted sound Power Emission at minimum speed (SPEmin)**	51 dBA
Fluid Dynamic Efficiency class (FDEC)	A	**Airborne acoustical A-weighted sound Power Emission at maximum speed (SPEmax)**	65 dBA
Lighting Efficiency (LE)	0,0 lux/W	**Airbourne acoustical A-weighted sound power emission at boost speed (SPEboost)**	72 dBA
Lighting Efficiency Class (LEC)	NA	**Time increase factor (F)**	0,6
Grease Filtering Efficiency (GFE)	85,1 %	**Energy Efficiency Index per first cavity**	32,8
Grease Filtering Efficiency Class (GFEC)	B	**Measured air flow rate at best efficiency point (Qbep)**	328 m³/h
Air flow at minumum speed (Qmin)	245 m³/h	**Measured air pressure at best efficiency point (Qbep)**	540 Pa
AIR FLOW AT MAXIMUM SPEED (QMAX)	505 m³/h	**Measured electric power input at best efficiency point (Wbep)**	131 W
Air flow at boost speed (Qboost)	700 m³/h	**Sound power level at highest setting (Lwa)**	65 dBA

Speed 1

Extraction rate IEC 61591	245 m³/h
Noise level IEC 60704-2-13	51 dBA
Pressure	290 Pa
Power	35 W

Speed 2

Extraction rate IEC 61591	285 m³/h
Noise level IEC 60704-2-13	55 dBA
Pressure	370 Pa
Power	45 W

Speed 3

Extraction rate IEC 61591	350 m³/h
Noise level IEC 60704-2-13	57 dBA
Pressure	525 Pa
Power	65 W

Speed 4

Extraction rate IEC 61591	380 m³/h
Noise level IEC 60704-2-13	59 dBA
Pressure	530 Pa
Power	75 W

Speed 5

Extraction rate IEC 61591	410 m³/h
Noise level IEC 60704-2-13	62 dBA
Pressure	535 Pa
Power	85 W

Speed 6

Extraction rate IEC 61591	445 m³/h
Noise level IEC 60704-2-13	63 dBA
Pressure	540 Pa
Power	105 W

Speed 7

Extraction rate IEC 61591	475 m³/h
Noise level IEC 60704-2-13	64 dBA
Pressure	545 Pa
Power	115 W

Speed 8

Extraction rate IEC 61591	505 m³/h
Noise level IEC 60704-2-13	65 dBA
Pressure	550 Pa
Power	130 W

Intensive speed

Extraction rate (IEC 61591)	550 m³/h
Noise level IEC 60704-2-13	66 dBA
Pressure	555 Pa
Power	140 W

Intensive Speed 2

Extraction rate IEC 61591	700 m³/h
Noise level IEC 60704-2-13	72 dBA
Pressure	560 Pa
Power	220 W

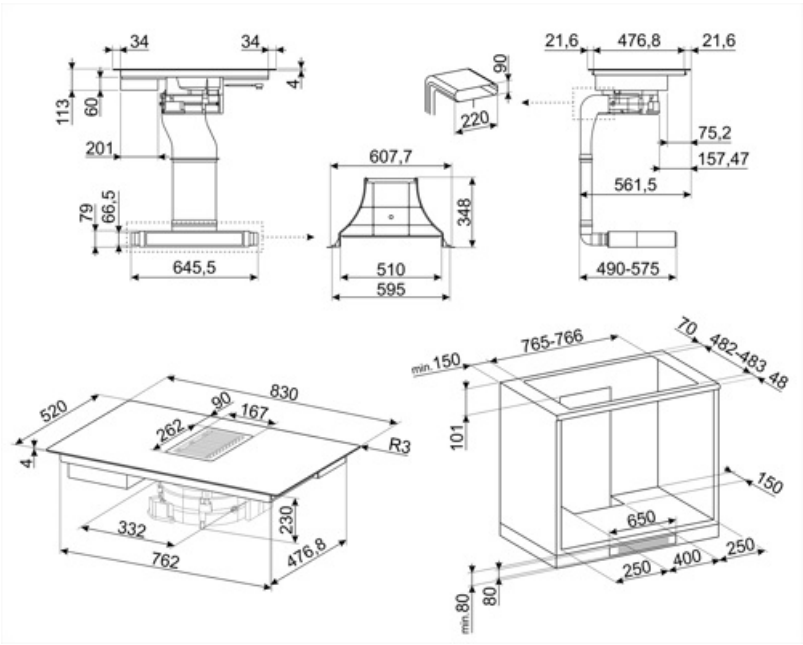
34
34
4
113
60
201
79
66,5
645,5
607,7
348
510
595
90
220
21,6
476,8
21,6
75,2
157,47
561,5
490-575
520
90
830
167
262
4
R3
332
230
762
476,8
min.150
765-766
70
482-483
48
101
150
650
250
400
250
min.80
80

Compatible Accessories



CON60H

Flat duct connector for tubes 220*60 mm. It helps to connect more tubes of the kit KITEHOBD4



GRI60H

Rectangular Louvred grille, external size 246*80 mm and internal 226*60*50 mm

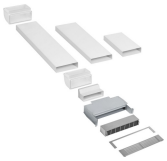

KITF6HOBD

Recirculating kit for Hobd: tubes + regenerable anti-odor filter + grid in stainless steel with magnetics fix (easy to remove) that fit in a plinth of min. 6 cm



FLTHOBD4

Charcoal Anti Odour Filter regenerable as spare part suitable for HOBD482D

KITEHOBD4

Filtering kit (lateral outlet) optional for Hobd: tube 1,5 mt and curve



RED60H



Reducer from 90 to 60 mm suitable for rectangular tube of 220 mm. Size: 220x90x92 mm

Symbols glossary



Power booster: option allows the zone to work at full power when very intense cooking is necessary.



Child lock: some models are fitted with a device to lock the programme/cycle so it cannot be accidentally changed.



Keep warm function: Keep warm function keeps the cooked food heated. In this mode the heating zone operates at a minimum capacity for 120 minutes and then turns off automatically.



Overfill protection: The special overfill protection shuts down the stove in the presence of overflow of liquids.



Quick selection, with one touch cooking begins at the highest level, then automatically reduces after time. Ideal for dishes that require quick boiling and then continued cooking without constant control (eg beef broth).



Indication of residual heat: After the glass ceramic hob is switched off the residual heat indicator shows which of the heating zones still remains hot. When the temperature drops below 60 ° C, the indicator goes out.



Timer: All ceramic hobs have a timer which automatically ends cooking after a preset time.



Min diameter pot detection of 9 cm



Evolution Slider totally Back-lighted ghost effect



Heavy duty cast iron pan stands: for maximum stability and strength.



The slider control panel allows you to adjust the power simply by passing your finger across the touch device.



Multizone: allows several pans to be used at once, large or small, offering freedom of placement and greater flexibility



PAUSE_72dpi



Quick Start function: the chosen temperature is reached faster. The heating element works at maximum power until the right temperature is reached.



Time elapsed: shows how long the cooking zone has been in use.



Permanent auto pot detection



Possibility to set the maximum power absorbion of the hob