HOBD472D

Product Family	Hob
Built-in type	Ultra-low profile or Fully Flushed
Dimensions	70 cm
Power supply	Electric
Type	Induction with integrated hood
Extraction	Extraction
Electronic control	Yes
EAN code	8017709321079
Energy efficicency class (EEC)	A++



Aesthetics

Aesthetic	Universale
Colour	Black
Finishing	Glass
Material	Glass
Glass type	Ceramic
Glass edge	Straight edge
Pan stands	Enamelled flat
Type of control setting	Compact Slider Plus
Slider	Yes
LED colours	Red
Control knob position	Front
Logo	Silk screen
Serigraphy colour	Grey

Program / Functions

No. of induction cook zones	4
Time-setting options	Automatic switch-off
No. of cooking zones with booster	4
No. of Flexible zones	2
Main on/off switch	Yes
Power levels	9
Auto-vent 2.0	Yes
Total no. of cook zones	4

Options



Multizone Option	Yes
Flexible Zone Type	MultiZone
Worktop Cut-Out	490x560 mm
Keep warm automatic function	Yes
End cooking timer	4
Pause option	Yes
Minute minder	1
End of cooking alarm	Yes
Residual time indicator	Yes
Limited Power Consumption Mode	Si Advance
Limited Power Consumption Mode in W	2800, 3500, 4500, 7400 W
Showroom Demo Option	Yes
Control Lock / Child Safety	Yes
Bridge option	Yes
Cleaning option	Yes
Quick start	Yes
Rapid level selection	Yes

Technical Features



Front-left - Induction - Multizone - 2.1 kW - Booster 3 kW - 22.0x19.7 cm
Rear-left - Induction - Multizone - 2.1 kW - Booster 3 kW - 22.0x19.7 cm
Rear-right - 2.1 kW - Booster 3 kW - 22.0x19.7 cm
Front-right - 2.1 kW - Booster 3 kW - 22.0x19.7 cm
Multizone left - Booster 3.70 kW - 39.5x22.0 cm
Multizone right - Booster 3.70 kW - 39.5x22.0 cm

Automatic setting according to pan dimension	Yes
pan detection	Yes
Permanent Automatic Pot Detection with indication of the relative control	Yes
Automatic switch off when overflow	Yes
Residual heat indicator	Yes
Protection against accidental start up	Yes

Accessories included

Other accessories	Extraction and Filtering (tubes and Charcoal filter) included

Electrical Connection

Electrical connection rating (W)	7620 W
Current	32 A
Voltage (V)	220-240 V
Type of electric cable supplied	Yes, Single and Double phase
Frequency (Hz)	50/60 Hz
Power supply cable length	120 cm
Terminal box	6 poles
Plug	Not present

Controls (hood)

Hood control setting	Touch Capacitive	**Display**	Yes
Led color	Rosso		

Programs / Functions (hood)



Delay function	Yes	**Hood time setting**	Delay
No. of speeds	9	**Other options**	Filter Kit included
Intensive speed	2	**Auto-Vent**	Yes
Other functions	AUTOVENT		

Technical Features (Hood)

Motor power	220 W	**Charcoal filters included**	YES, regenerable
No. of filters	1	**Filter replacement indicator**	Yes
Anti-grease filters	Alluminio		

Performance / Energy Label (hood)

Fluid Dynamic Efficiency (FDE)	37,60	**Airbourne acouistical A-weighted sound Power Emission at minimum speed (SPEmin)**	49 dBA
Fluid Dynamic Efficiency class (FDEC)	A	**Airborne acoustical A-weighted sound Power Emission at maximum speed (SPEmax)**	65 dBA
Lighting Efficiency (LE)	0,0 lux/W	**Airbourne acoustical A-weighted sound power emission at boost speed (SPEboost)**	71 dBA
Lighting Efficiency Class (LEC)	NA	**Time increase factor (F)**	0,6
Grease Filtering Efficiency (GFE)	75,1 %	**Energy Efficiency Index**	32,9
Grease Filtering Efficiency Class (GFEC)	C	**Measured air flow rate at best efficiency point (Qbep)**	326 m³/h
Air flow at minumum speed (Qmin)	230 m³/h	**Measured air pressure at best efficiency point (Pbep)**	548 Pa
Air flow at maximum speed (Qmax)	500 m³/h	**Measured electric power input at best efficiency point (Wbep)**	132 W
Air flow at boost speed (Qboost)	630 m³/h	**Sound power level at highest setting (Lwa)**	65 dBA

Speed 1

Extraction rate IEC 61591	230 m³/h
Noise level IEC 60704-2-13	49 dBA
Pressure	280 Pa
Power	40 W

Speed 2

Extraction rate IEC 61591	270 m³/h
Noise level IEC 60704-2-13	51 dBA
Pressure	370 Pa
Power	50 W

Speed 3

Extraction rate IEC 61591	310 m³/h
Noise level IEC 60704-2-13	55 dBA
Pressure	500 Pa
Power	60 W

Speed 4

Extraction rate IEC 61591	350 m³/h
Noise level IEC 60704-2-13	57 dBA
Pressure	570 Pa
Power	75 W

Speed 5

Extraction rate IEC 61591	380 m³/h
Noise level IEC 60704-2-13	60 dBA
Pressure	580 Pa
Power	85 W

Speed 6

Extraction rate IEC 61591	415 m³/h
Noise level IEC 60704-2-13	62 dBA
Pressure	590 Pa
Power	100 W

Speed 7

Extraction rate IEC 61591	440 m³/h
Noise level IEC 60704-2-13	63 dBA
Pressure	600 Pa
Power	110 W

Speed 8

Extraction rate IEC 61591	470 m³/h
Noise level IEC 60704-2-13	64 dBA
Pressure	610 Pa
Power	115 W

Speed 9

Extraction rate IEC 61591	500 m³/h
Noise level IEC 60704-2-13	65 dBA
Pressure	620 Pa
Power	125 W

Intensive Speed 2

Extraction rate IEC 61591	630 m³/h
Noise level IEC 60704-2-13	71 dBA
Pressure	630 Pa
Power	220 W

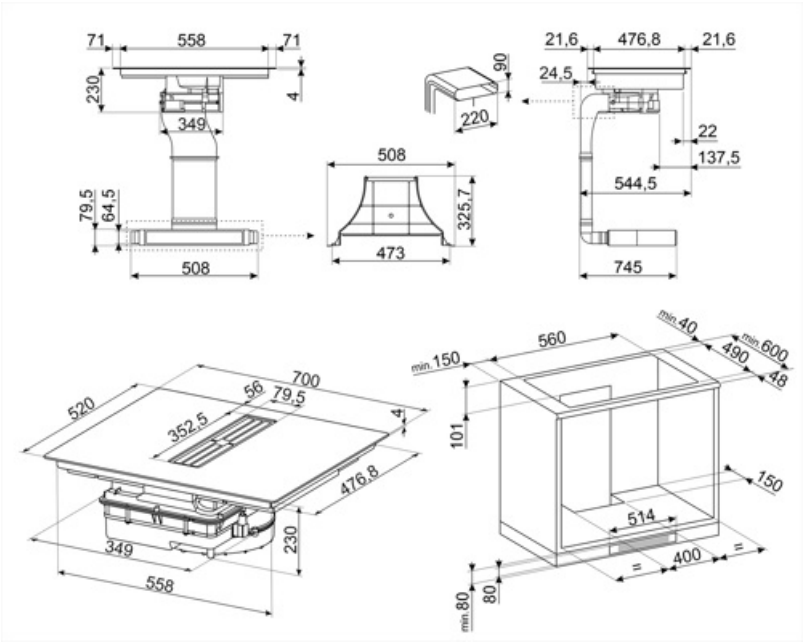

Compatible Accessories

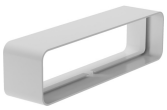

CON60H

Flat duct connector for tubes 220*60 mm. It help to connect more tubes of the kit KITEHOBD4



GRI60H

Rectangular Louvred grille, external size 246*80 mm and internal 226*60*50 mm



KITEHOBD4

Filtering kit (lateral outlet) optional for Hobd: tube 1,5 mt and curve, high 60 mm



RED60H

Reducer from 90 to 60 mm suitable for rectangular tube of 220 mm. Size: 220x90x92 mm



FLTHOBD4S

Charcoal Anti Odour Filter regenerable as spare part suitable for HOBD472D



GRILLPLATE

Universal griddle for induction, gas, ceramic and electric hobs. Non-stick surface ideal for cooking meat, cheese and vegetables. Dimensions: 410 x 240 mm.

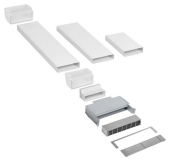

KITF6HOBD

Recirculating kit for Hobd: tubes + regenerable anti-odor filter + grid in stainless steel with magnetics fix (easy to remove) that fit in a plinth of min. 6 cm. The ceramic filter can be regenerate up to 10 times by putting it inside the oven at 250° for 1 hour.



TPKPLATE

Universal plate for induction, gas, ceramic and electric hobs. Non-stick surface ideal for cooking fish, eggs and vegetables. Dimensions: 410 X 240 mm.

Symbols glossary



Permanent auto pot detection



A smart infrared system, which allows a hood and hob with this feature to work together.



Child lock: some models are fitted with a device to lock the programme/cycle so it cannot be accidentally changed.



This function allows you to keep cooked food warm without burner it



Overfill protection: The special overfill protection shuts down the stove in the presence of overflow of liquids.



Quick selection, with one touch cooking begins at the highest level, then automatically reduces after time. Ideal for dishes that require quick boiling and then continued cooking without constant control (eg beef broth).



Indication of residual heat: After the glass ceramic hob is switched off the residual heat indicator shows which of the heating zones still remains hot. When the temperature drops below 60 ° C, the indicator goes out.



Timer: All ceramic hobs have a timer which automatically ends cooking after a preset time.



Possibility to set the maximum power absorbion of the hob.



Connection between hob and hood



Power booster: option allows the zone to work at full power when very intense cooking is necessary.



The slider control panel allows you to adjust the power simply by passing your finger across the touch device.



Multizone: allows several pans to be used at once, large or small, offering freedom of placement and greater flexibility



All cooking zones can be reduced to the minimum power level, so the hob can be left unattended for a short period without food overcooking or burning. Then just press again this function, the previously set power levels can be reactivated.



Quick Start function: the chosen temperature is reached faster. The heating element works at maximum power until the right temperature is reached.



Time elapsed: shows how long the cooking zone has been in use.



TWIN_ZONE_72dpi



Compact Slider back-lighted ghost effect