HOBD472D2

Product Family	Hob
Built-in type	Ultra-low profile or Fully Flushed
Dimensions	70 cm
Power supply	Electric
Type	Induction with integrated hood
Extraction	Extraction
Electronic control	Yes
EAN code	8017709341862
Energy efficicency class (EEC)	A+



Aesthetics

Aesthetic	Classica
Colour	Black
Finishing	Glass
Material	Glass
Glass type	Ceramic
Glass edge	Straight edge
Pan stands	Stainless steel
Type of control setting	EVO Slider
Slider	Yes
LED colours	Red
Control knob position	Front
Logo	Silk screen
Serigraphy colour	Grey

Program / Functions

No. of induction cook zones	4
Time-setting options	Automatic switch-off
No. of cooking zones with booster	4
No. of Flexible zones	2
Main on/off switch	Yes
Power levels	9
Total no. of cook zones	4

Options

Multizone Option	Yes	**Limited Power Consumption Mode**	Si Advance
Flexible Zone Type	MultiZone	**Limited Power Consumption Mode in W**	2800, 3500, 4500, 7400 W
Worktop Cut-Out	490x560 mm	**Showroom Demo Option**	Yes
Keep warm automatic function	Yes	**Control Lock / Child Safety**	Yes
End cooking timer	4	**Bridge option**	Yes
Pause option	Yes	**Cleaning option**	Yes
Minute minder	1	**Quick start**	Yes
End of cooking alarm	Yes	**Rapid level selection**	Yes
Residual time indicator	Yes		

Technical Features

Front-left - 2.10 kW - Booster 3.00 kW - 21.0X19.0 cm
Rear-left - 2.10 kW - Booster 3.00 kW - 21.0X19.0 cm
Rear-right - 2.10 kW - Booster 3.00 kW - 21.0X19.0 cm
Front-right - 2.10 kW - Booster 3.00 kW - 21.0X19.0 cm
Multizone left - Booster 3.70 kW - 39.5x22.0 cm
Multizone right - Booster 3.70 kW - 39.5x22.0 cm

Automatic setting according to pan dimension	Yes	**Automatic switch off when overflow**	Yes
pan detection	Yes, min. 9 cm	**Residual heat indicator**	Yes
Permanent Automatic Pot Detection with indication of the relative control	Yes	**Protection against accidental start up**	Yes

Accessories included

Other accessories	Filtering kit and charcoal filter regenerable included

Electrical Connection

Electrical connection rating (W)	7620 W	**Frequency (Hz)**	50/60 Hz
Current	33 A	**Power supply cable length**	120 cm
Voltage (V)	220-240 V	**Terminal box**	6 poles
Voltage 2 (V)	380-415 V	**Plug**	Not present
Type of electric cable supplied	Yes, Single and Double phase		

Controls (hood)

Hood control setting	Touch Capacitive	**Display**	Yes
Led color	Rosso		

Programs / Functions (hood)

Delay function	Yes	**Hood time setting**	Delay
No. of speeds	8	**Other options**	Filter Kit included
Intensive speed	2	**Automatic connection between integrated hood and hob**	Yes

Technical Features (Hood)

Free outlet maximum capacity	650 m³/h	**Anti-grease filters**	Inox
Motor power	220 W	**Charcoal filters included**	YES, regenerable
No. of filters	1	**Filter replacement indicator**	Yes

Performance / Energy Label (hood)

Fluid Dynamic Efficiency (FDE)	32,10	**Airbourne acouistical A-weighted sound Power Emission at minimum speed (SPEmin)**	49 dBA
Fluid Dynamic Efficiency class (FDEC)	A	**Airborne acoustical A-weighted sound Power Emission at maximum speed (SPEmax)**	68 dBA
Lighting Efficiency (LE)	0,0 lux/W	**Airbourne acoustical A-weighted sound power emission at boost speed (SPEboost)**	73 dBA
Lighting Efficiency Class (LEC)	NA	**Time increase factor (F)**	0,8
Grease Filtering Efficiency (GFE)	85,1 %	**Energy Efficiency Index**	44,2
Grease Filtering Efficiency Class (GFEC)	B	**Measured air flow rate at best efficiency point (Qbep)**	320 m³/h
Air flow at minumum speed (Qmin)	230 m³/h	**Measured air pressure at best efficiency point (Pbep)**	502 Pa
Air flow at maximum speed (Qmax)	500 m³/h	**Measured electric power input at best efficiency point (Wbep)**	139 W
Air flow at boost speed (Qboost)	630 m³/h	**Sound power level at highest setting (Lwa)**	68 dBA

Speed 1

Extraction rate IEC 61591	230 m³/h
Noise level IEC 60704-2-13	49 dBA
Pressure	280 Pa
Power	40 W

Speed 2

Extraction rate IEC 61591	270 m³/h
Noise level IEC 60704-2-13	51 dBA
Pressure	370 Pa
Power	50 W

Speed 3

Extraction rate IEC 61591	340 m³/h
Noise level IEC 60704-2-13	51 dBA
Pressure	400 Pa
Power	70 W

Speed 4

Extraction rate IEC 61591	370 m³/h
Noise level IEC 60704-2-13	60 dBA
Pressure	570 Pa
Power	90 W

Speed 5

Extraction rate IEC 61591	400 m³/h
Noise level IEC 60704-2-13	62 dBA
Pressure	500 Pa
Power	100 W

Speed 6

Extraction rate IEC 61591	435 m³/h
Noise level IEC 60704-2-13	63 dBA
Pressure	550 Pa
Power	120 W

Speed 7

Extraction rate IEC 61591	460 m³/h
Noise level IEC 60704-2-13	65 dBA
Pressure	600 Pa
Power	150 W

Speed 8

Extraction rate IEC 61591	500 m³/h
Noise level IEC 60704-2-13	68 dBA
Pressure	620 Pa
Power	170 W

Intensive speed

Extraction rate (IEC 61591)	540 m³/h
Noise level IEC 60704-2-13	70 dBA
Pressure	625 Pa
Power	180 W

Intensive Speed 2

Extraction rate IEC 61591	630 m³/h
Noise level IEC 60704-2-13	73 dBA
Pressure	630 Pa
Power	220 W

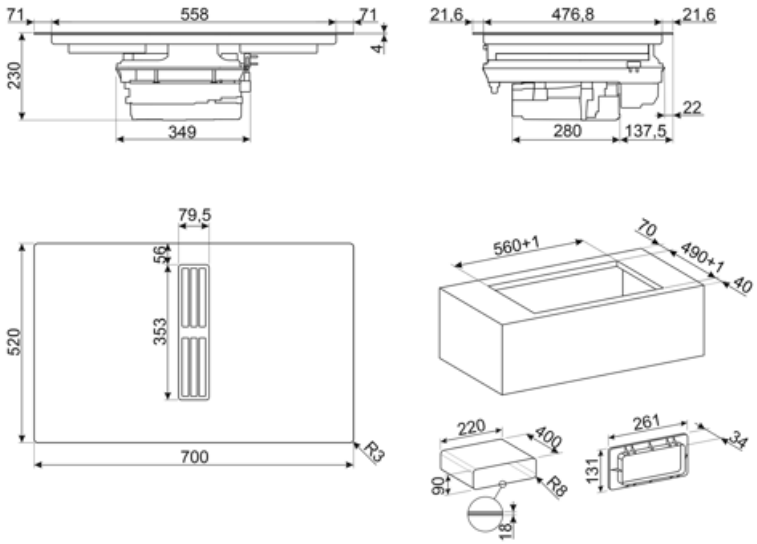
71
558
71
4
230
349
21.6
476.8
21.6
22
280
137.5
79.5
56
353
520
700
R3
560+1
70
490+1
40
220
400
90
R8
18
261
34
131

Compatible Accessories

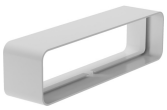

CON60H

Flat duct connector for tubes 220*60 mm. It help to connect more tubes of the kit KITEHOBD4

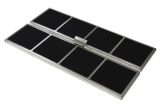

FLTHOBD2

n.2 high-performance carbon filters regenerable up to 8 times, washing it in the dishwasher and drying it at max 70° in the oven for max 120 minutes



GRI60H

Rectangular Louvred grille, external size 246*80 mm and internal 226*60*50 mm

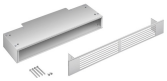

GRIX6H

Stainless steel ventilation grille, size 426*60 mm.



KITEHOBD10

Ducted kit for HOBD*2 with tubes and curve high 10 mm.



KITREBFLOW

Rectangular grid used in ventilation system, 290 x 160 mm. Backdraft Damper for for regulating the air flow from the kitchen. Compatible for HOBD*2 models.



CON90H

Connector for rectangular tubes high 90 mm. Size external 227*94*63 mm, internal 223*90*63 mm

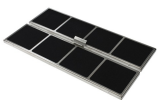

FLTSTDHOBD2

Anti Odour Filter not regenerable as spare part, suitable for recirculation mode.



GRILLPLATE

Universal griddle for induction, gas, ceramic and electric hobs. Non-stick surface ideal for cooking meat, cheese and vegetables. Dimensions: 410 x 240 mm.



KITDT50X10

tape for installation kit of HOBD*2. 10 m lenght. 50 mm width.



KITEHOBD4

Filtering kit (lateral outlet) optional for Hobd: tube 1,5 mt and curve, high 60 mm

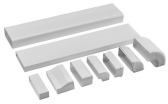

KITRHOBD6

Mounting kit for recirculating installation: pipes and curves to be mounted in a plinth of minimum 6cm height. Available for HOBD*2 series.



KITSEBL

Squared grid used in ventilation system with backdraft Damper for regulating the air flow from the kitchen. Compatible for HOBD*2 models.



TPKPLATE

Universal plate for induction, gas, ceramic and electric hobs. Non-stick surface ideal for cooking fish, eggs and vegetables. Dimensions: 410 X 240 mm.



RED60H

Reducer from 90 to 60 mm suitable for rectangular tube of 220 mm. Size: 220x90x92 mm

Symbols glossary



Permanent auto pot detection



Child lock: some models are fitted with a device to lock the programme/cycle so it cannot be accidentally changed.



The slider control panel allows you to adjust the power simply by passing your finger across the touch device.



Multizone: allows several pans to be used at once, large or small, offering freedom of placement and greater flexibility



Min diameter pot detection of 9 cm.



Possibility to set the maximum power absorbion of the hob.



Quick Start function: the chosen temperature is reached faster. The heating element works at maximum power until the right temperature is reached.



Time elapsed: shows how long the cooking zone has been in use.



TWIN_ZONE_72dpi



Power booster: option allows the zone to work at full power when very intense cooking is necessary.



Evolution Slider totally Back-lighted ghost effect



This function allows you to keep cooked food warm without burner it



Overfill protection: The special overfill protection shuts down the stove in the presence of overflow of liquids.



All cooking zones can be reduced to the minimum power level, so the hob can be left unattended for a short period without food overcooking or burning. Then just press again this function, the previously set power levels can be reactivated.



Quick selection, with one touch cooking begins at the highest level, then automatically reduces after time. Ideal for dishes that require quick boiling and then continued cooking without constant control (eg beef broth).



Indication of residual heat: After the glass ceramic hob is switched off the residual heat indicator shows which of the heating zones still remains hot. When the temperature drops below 60 ° C, the indicator goes out.



Timer: All ceramic hobs have a timer which automatically ends cooking after a preset time.