KATE600CEX

Product family	Hood
Hood Type	Decorative wall hood
Design	T flat
Extraction	Extraction
Material	Stainless steel
Type of steel	Brushed
EAN code	8017709255053
Hood width	60 cm
Aesthetic	Universale
Colour	Stainless Steel
Finishing	Satin
Logo	Silk screen



Controls

Control setting	Buttons

Program / Functions

No. of speeds	3

Technical Features

No. of lights	2	**No. of filters**	2
Light type	LED	**Anti-grease filters**	Aluminium
Light Power	2,5 W	**Vent outlet**	150 mm
Light color temperature (K)	3500 K	**Minimum distance from GAS hob**	650 mm
Free outlet maximum capacity	612 m³/h	**Minimum distance from ELECTRIC hob**	500 mm
Motor power	175 W	**Non return valve**	Yes

	Extraction rate IEC 61591 [m³/h]	Noise level IEC 60704-2-13 [dBA]
Speed 1	241	46
Speed 2	370	56

Speed 3	590	65

Accessories included



Tube reduction	Yes	**Charcoal filters included**	Yes

Performance / Energy Label



Annual Efficiency Consumption (AEChood)	77 kWh/a	**Airbourne acouistical A-weighted sound Power Emission at minimum speed (SPEmin)**	47 dBA
Energy efficicency class (EEC)	C	**Airborne acoustical A-weighted sound Power Emission at maximum speed (SPEmax)**	68 dBA
Fluid Dynamic Efficiency (FDE)	20,2	**Time increase factor (F)**	1,3
Fluid Dynamic Efficiency class (FDEC)	C	**Measured air flow rate at best efficiency point (Qbep)**	336 m³/h
Lighting Efficiency (LE)	76,1 lux/W	**Measured air pressure at best efficiency point (Pbep)**	334 Pa
Lighting Efficiency Class (LEC)	A	**Measured electric power input at best efficiency point (Wbep)**	155 W
Grease Filtering Efficiency (GFE)	76 %	**Nominal Power consumption of the light system (WL)**	5 W
Grease Filtering Efficiency Class (GFEC)	C	**Average illumination of the light on the cooking surface (Emiddle)**	381 lux
Air flow at minumum speed (Qmin)	240 m³/h	**Sound power level at highest setting (Lwa)**	68 dBA
Air flow at maximum speed (Qmax)	581 m³/h		

Electrical Connection

Electrical connection rating	180 W	**Power supply cable length**	1500 mm
Voltage	220-240 V	**Plug**	Not present
Frequency (Hz)	50-60 Hz		

Optional accessories

Chimney extension	KITCMNKAT

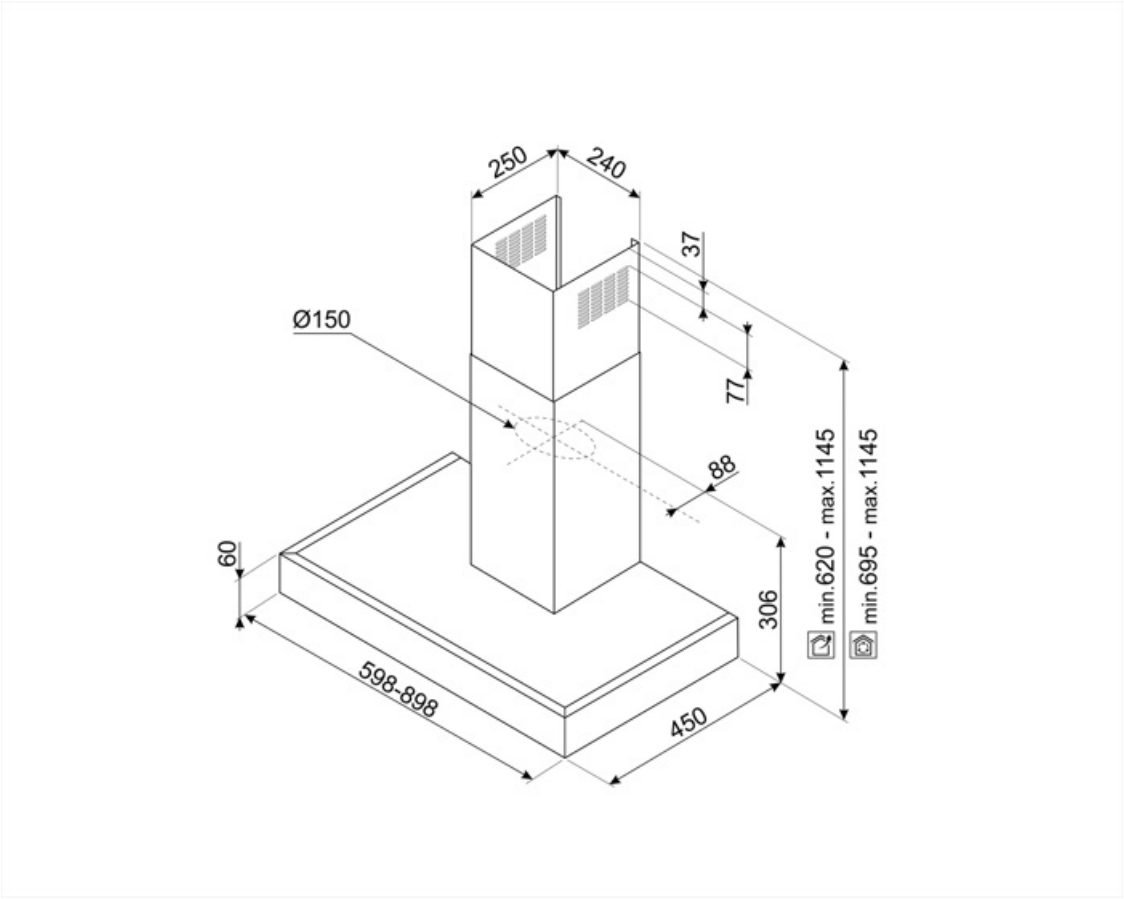
250
240
37
Ø150
77
88
60
306
min.620 - max.1145
min.695 - max.1145
598-898
450

Compatible Accessories



KITCMNKAT

Chimney extension dimension 241 * 231 * 810 T-shape hood KAT & KATE Stainless Steel



KITFC999

Charcoal filter Kit 1 piece



KITFC900

Charcoal filter. Kit 1 piece. High performances. Regenerable. To be whased after 3 months of use with hot water. To be changed after 3 years of use.

Symbols glossary



Filters: Model has filters to help remove grease from the steam emanating from the pans during cooking.



Lights: All cooker hoods feature lights to illuminate the cooking area or add to the ambience of the kitchen.



Charcoal filters: Extracting through charcoal filters or directly to the exterior lessens strong cooking odours considerably.

