KATE900CEX

Product family	Hood
Hood Type	Decorative wall hood
Design	T flat
Extraction	Extraction
Material	Stainless steel
Type of steel	Brushed
EAN code	8017709255060
Hood width	90 cm
Aesthetic	Universale
Colour	Stainless steel
Finishing	Satin
Serigraphy colour	Black
Logo	Silk screen



Controls

Control setting	Buttons

Program / Functions

No. of speeds	3

Technical Features

No. of lights	2
Light type	LED
Light Power	2.5 W
Light color temperature scale (K)	3500 K
Free outlet maximum capacity	612 m³/h
Motor power	175 W
No. of filters	3
Anti-grease filters	Aluminium
Filter replacement indicator	Yes
Vent outlet	150 mm
Minimum distance from GAS hob	650 mm
Minimum distance from ELECTRIC hob	500 mm
Non return valve	Yes

	Extraction rate IEC 61591 [m³/h]	Noise level IEC 60704-2-13 [dBA]
Speed 1	241	46
Speed 2	370	56

Speed 3	590	68

Accessories Included



Charcoal filters included Yes

Performance / Energy Label



Annual Efficiency Consumption (AEChood)	77 kWh/a
Energy efficicency class (EEC)	C
Fluid Dynamic Efficiency (FDE)	20.2
Fluid Dynamic Efficiency class (FDEC)	C
Lighting Efficiency (LE)	76.1 lux/W
Lighting Efficiency Class (LEC)	A
Grease Filtering Efficiency (GFE)	76 %
Grease Filtering Efficiency Class (GFEC)	C
Air flow at minumum speed (Qmin)	240 m³/h
Air flow at maximum speed (Qmax)	581 m³/h
Airbourne acouistical A-weighted sound Power Emission at minimum speed (SPEmin)	47 dBA
Airborne acoustical A-weighted sound Power Emission at maximum speed (SPEmax)	68 dBA
Time increase factor (F)	1.3
Measured air flow rate at best efficiency point (Qbep)	336 m³/h
Measured air pressure at best efficiency point (Pbep)	334 Pa
Measured electric power input at best efficiency point (Wbep)	155 W
Nominal Power consumption of the light system (WL)	5 W
Average illumination of the light on the cooking surface (Emiddle)	381 lux
Sound power level at highest setting (Lwa)	68 dBA

Electrical Connection

Electrical connection rating	180 W
Voltage	220-240 V
Frequency (Hz)	50-60 Hz
Power supply cable length	1500 mm
Plug	Not present

Optional accessories

Chimney extension	KITCMNKAT

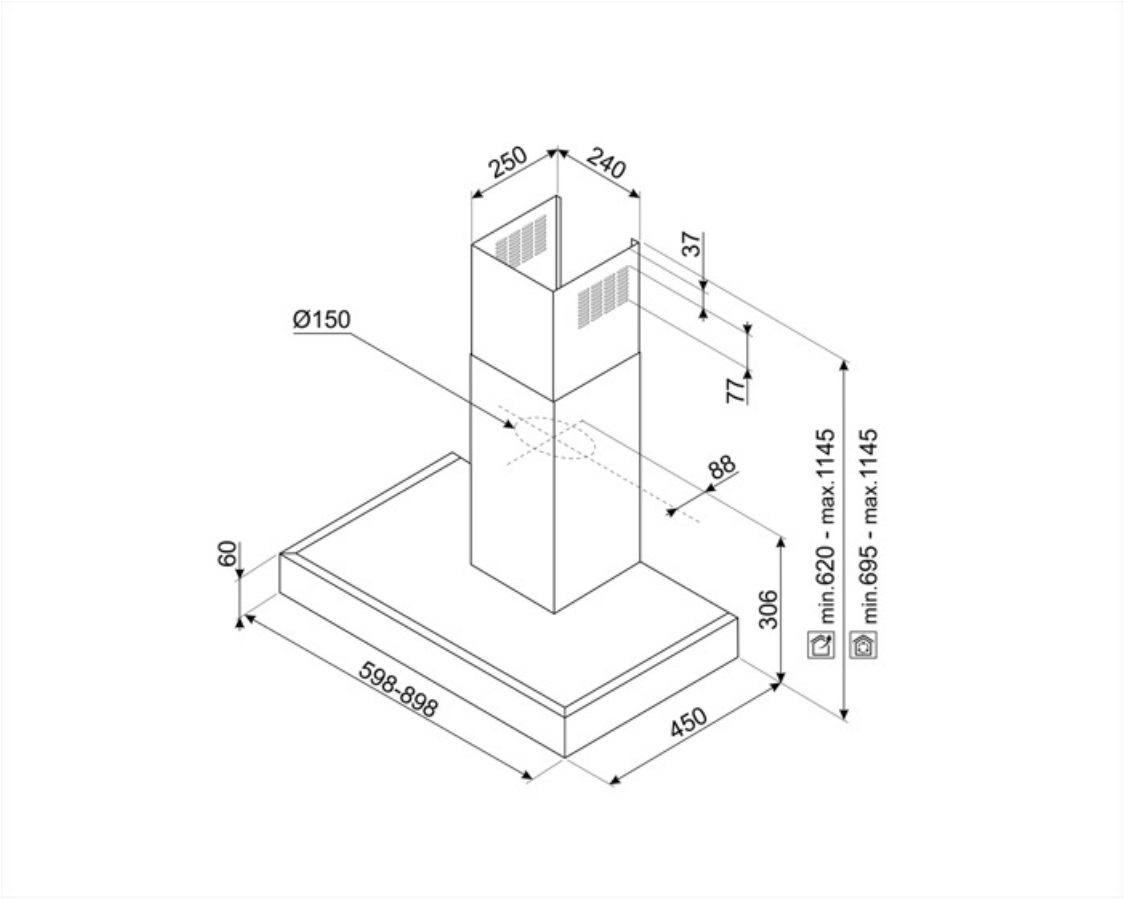
250
240
37
Ø150
77
88
60
306
min.620 - max.1145
min.695 - max.1145
598-898
450

Compatible Accessories



KITCMNKAT

Chimney extension dimension 241 * 231 * 810 T-shape hood KAT & KATE Stainless Steel



KITFC999

Charcoal filter Kit 1 piece



KITFC900

Charcoal filter Kit 1 piece high perfrmances washable

Symbols glossary



Filters: Model has filters to help remove grease from the steam emanating from the pans during cooking.





Lights: All cooker hoods feature lights to illuminate the cooking area or add to the ambience of the kitchen.



Charcoal filters: Extracting through charcoal filters or directly to the exterior lessens strong cooking odours considerably.



Warning light(s): to advise when filters need changing.