KBT600BL

Product family	Hood
Hood Type	Decorative wall hood
Design	T flat
Extraction	Extraction
Electronic control	Yes
Material	Stainless steel
EAN code	8017709347246
Hood width	60 cm
Aesthetic	Universale
Colour	Black
Logo	Silk screen



Controls

Control setting	Electronic buttons

Program / Functions

No. of speeds	3
Intensive speed	BOOST
24h air filter function	24 hours
Time-setting options	

Technical Features

No. of lights	2	**Anti-grease filters**	Aluminium
Light type	LED	**Filter replacement indicator**	Yes
Light Power	1,3 W	**Vent outlet**	150 mm
Light color temperature (K)	3000 K	**Minimum distance from GAS hob**	650 mm
Free outlet maximum capacity	820 m³/h	**Minimum distance from ELECTRIC hob**	500 mm
Motor power	230 W	**Non return valve**	Yes
No. of filters	2		

	Extraction rate IEC 61591 [m³/h]	Noise level IEC 60704-2-13 [dBA]
Speed 1	260	49
Speed 2	358	57
Speed 3	473	64
Intensive speed	686	72

Accessories included

Tube reduction	Yes

Performance / Energy Label



Annual Efficiency Consumption (AEChood)	53 kWh/a
Energy efficicency class (EEC)	A
Fluid Dynamic Efficiency (FDE)	29,8
Fluid Dynamic Efficiency class (FDEC)	A
Lighting Efficiency (LE)	70,4 lux/W
Lighting Efficiency Class (LEC)	A
Grease Filtering Efficiency (GFE)	79,7 %
Grease Filtering Efficiency Class (GFEC)	C
Air flow at minumum speed (Qmin)	261 m³/h
Air flow at maximum speed (Qmax)	473 m³/h
Air flow at boost speed (Qboost)	686 m³/h

Airbourne acouistical A-weighted sound Power Emission at minimum speed (SPEmin)	48 dBA
Airborne acoustical A-weighted sound Power Emission at maximum speed (SPEmax)	64 dBA
Airbourne acoustical A-weighted sound power emission at boost speed (SPEboost)	71 dBA
Time increase factor (F)	0,9
Energy Efficiency Index	52,0
Measured air flow rate at best efficiency point (Qbep)	395 m³/h
Measured air pressure at best efficiency point (Pbep)	451 Pa
Measured electric power input at best efficiency point (Wbep)	159 W
Nominal Power consumption of the light system (WL)	3 W
Average illumination of the light on the cooking surface (Emiddle)	156 lux
Sound power level at highest setting (Lwa)	70 dBA

Electrical Connection

Electrical connection rating	230 W	**Power supply cable length**	1500 mm
Voltage	220-240 V	**Plug**	Not present
Frequency (Hz)	50-60 Hz		

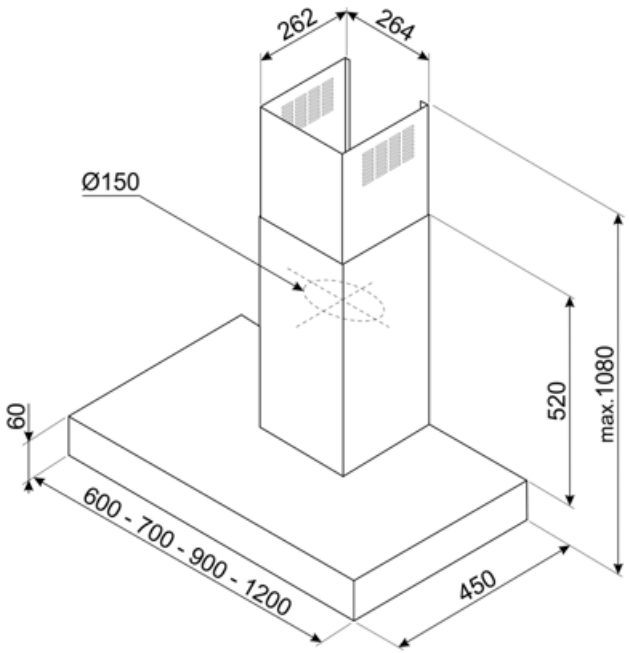

Compatible Accessories

KITCEKBTBL

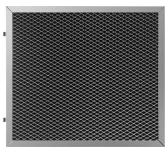

KITFCKBT

1 pc of charcoal filter for the hood models KBT* / KBCT*

KITFCKBTR

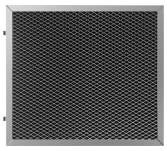

1 pcs of Charcoal filter Regenerable* suitable for all the KBT/KBCT models. * It can be washed in the dishwasher up to 12 times and dry in the oven at max 90° for 60 min. dimension 237,5(H)x245x10 mm

Symbols glossary



24h: When selected this function refreshes the air for c. 10 minutes every hour over a 24 hour period, at minimum speed and an imperceptible noise level.



Energy efficiency class A



Warning light(s): to advise when filters need changing.



Intensive/turbo setting: when extra fast extraction is required.



Filters: Model has filters to help remove grease from the steam emanating from the pans during cooking.



Switch off automatically: A special setting, to run after the end of cooking for a pre-set time and then switch off automatically.



Lights: All cooker hoods feature lights to illuminate the cooking area or add to the ambience of the kitchen.