KBT900XE

Product family	Hood
Hood Type	Decorative wall hood
Design	T flat
Extraction	Extraction
Electronic control	Yes
Material	Stainless steel
Type of steel	Brushed
EAN code	8017709284503
Hood width	90 cm
Aesthetic	Universale
Colour	Stainless Steel
Finishing	Satin
Logo	Silk screen



Controls

Control setting	Electronic buttons

Program / Functions

No. of speeds	3
Intensive speed	BOOST
24h air filter function	24
Time-setting options	

Technical Features

No. of lights	2
Light type	LED
Light Power	1.3 W
Light color temperature (K)	3000 K
Free outlet maximum capacity	730 m³/h
Motor power	230 W
No. of filters	3
Anti-grease filters	Aluminium
Filter replacement indicator	Yes
Vent outlet	150 mm
Minimum distance from GAS hob	650 mm
Minimum distance from ELECTRIC hob	500 mm
Non return valve	Yes

	Extraction rate IEC 61591 [m³/h]	Noise level IEC 60704-2-13 [dBA]
Speed 1	265	47
Speed 2	360	55
Speed 3	480	62
Intensive speed	713	72

Accessories included

Tube reduction	Yes

Performance / Energy Label



Annual Efficiency Consumption (AEChood)	54 kWh/a
Energy efficicency class (EEC)	A
Fluid Dynamic Efficiency (FDE)	31.2
Fluid Dynamic Efficiency class (FDEC)	A
Lighting Efficiency (LE)	60.0 lux/W
Lighting Efficiency Class (LEC)	A
Grease Filtering Efficiency (GFE)	76.5 %
Grease Filtering Efficiency Class (GFEC)	C
Air flow at minumum speed (Qmin)	265 m³/h
Air flow at maximum speed (Qmax)	480 m³/h
Air flow at boost speed (Qboost)	713 m³/h

Airbourne acouistical A-weighted sound Power Emission at minimum speed (SPEmin)	46 dBA
Airborne acoustical A-weighted sound Power Emission at maximum speed (SPEmax)	62 dBA
Airbourne acoustical A-weighted sound power emission at boost speed (SPEboost)	71 dBA
Time increase factor (F)	0.9
Energy Efficiency Index	52.0
Measured air flow rate at best efficiency point (Qbep)	395 m³/h
Measured air pressure at best efficiency point (Pbep)	451 Pa
Measured electric power input at best efficiency point (Wbep)	159 W
Nominal Power consumption of the light system (WL)	3 W
Average illumination of the light on the cooking surface (Emiddle)	156 lux
Sound power level at highest setting (Lwa)	62 dBA

Electrical Connection

Electrical connection rating	230 W	**Power supply cable length**	1500 mm
Voltage	220-240 V	**Plug**	Not present
Frequency (Hz)	50-60 Hz		

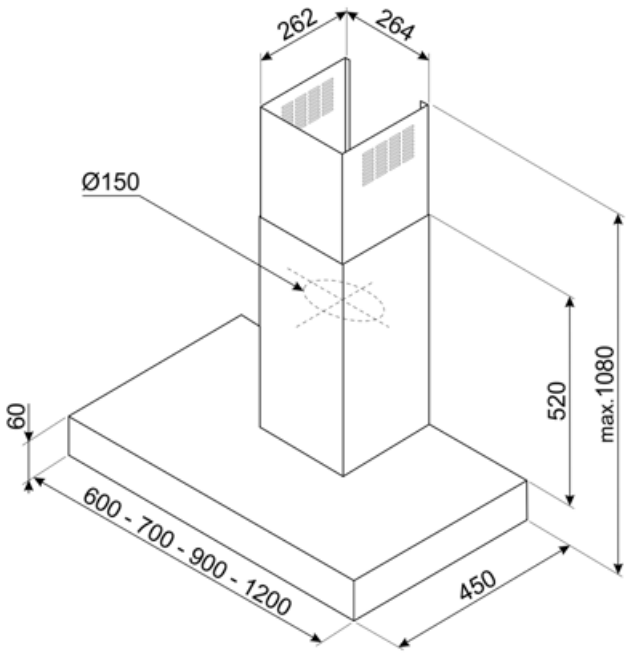

Compatible Accessories



KITCEKBT

Chimney extension, dimensions 261,5 * 260 * 830 mm suitable for T-shape hood KBT* & KBCT*, max hight 1380 mm Stainless Steel

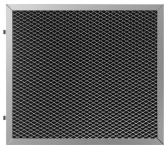

KITFCKBTR

1 pcs of Charcoal filter Regenerable* suitable for all the KBT/KBCT models. * It can be washed in the dishwasher up to 12 times and dry in the oven at max 90° for 60 min. dimension 237,5(H)x245x10 mm

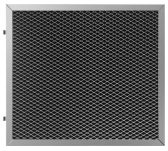

KITFCKBT

1 pc of charcoal filter for the hood models KBT* / KBCT*

Symbols glossary



24h: When selected this function refreshes the air for c. 10 minutes every hour over a 24 hour period, at minimum speed and an imperceptible noise level.



Energy efficiency class A



Warning light(s): to advise when filters need changing.



Intensive/turbo setting: when extra fast extraction is required.



Filters: Model has filters to help remove grease from the steam emanating from the pans during cooking.



Switch off automatically: A special setting, to run after the end of cooking for a pre-set time and then switch off automatically.



Lights: All cooker hoods feature lights to illuminate the cooking area or add to the ambience of the kitchen.