KBTI9L4VN

Product family	Hood
Hood Type	Decorative island hood
Design	T flat
Extraction	Extraction
Electronic control	Yes
Material	Stainless Steel + Glass
Type of steel	Brushed
EAN code	8017709305741
Hood width	90 cm
Aesthetic	Universale
Colour	Stainless Steel
Finishing	Satin
Logo	Silk screen



Controls

Control setting	Touch control	**Led color**	White

Program / Functions

No. of speeds	3
Intensive speed	
24h air filter function	
Time-setting options	
Auto-vent 2.0	

Technical Features

No. of lights	2	**No. of filters**	3
Light type	LED	**Anti-grease filters**	Aluminium
Light Power	7,3 W	**Filter replacement indicator**	Yes
Dimmer mode	Yes	**Vent outlet**	150 mm
Light color temperature range	3000 - 5700 K	**Minimum distance from GAS hob**	650 mm
Free outlet maximum capacity	820 m³/h	**Minimum distance from ELECTRIC hob**	650 mm
Motor power	275 W	**Non return valve**	Yes

	Extraction rate IEC 61591 [m³/h]	Noise level IEC 60704-2-13 [dBA]
Speed 1	280	48
Speed 2	415	59
Speed 3	626	69
Intensive speed	778	74

Accessories included

Tube reduction	Yes

Performance / Energy Label



Annual Efficiency Consumption (AEChood)	49 kWh/a
Energy efficicency class (EEC)	A
Fluid Dynamic Efficiency (FDE)	35,4
Fluid Dynamic Efficiency class (FDEC)	A
Lighting Efficiency (LE)	23,5 lux/W
Lighting Efficiency Class (LEC)	B
Grease Filtering Efficiency (GFE)	77,4 %
Grease Filtering Efficiency Class (GFEC)	C
Air flow at minumum speed (Qmin)	280 m³/h
Air flow at maximum speed (Qmax)	626 m³/h
Air flow at boost speed (Qboost)	778 m³/h

Airbourne acouistical A-weighted sound Power Emission at minimum speed (SPEmin)	47 dBA
Airborne acoustical A-weighted sound Power Emission at maximum speed (SPEmax)	69 dBA
Airbourne acoustical A-weighted sound power emission at boost speed (SPEboost)	73 dBA
Energy Efficiency Index	46,4
Measured air flow rate at best efficiency point (Qbep)	397 m³/h
Measured air pressure at best efficiency point (Pbep)	474 Pa
Measured electric power input at best efficiency point (Wbep)	175 W
Nominal Power consumption of the light system (WL)	15 W
Average illumination of the light on the cooking surface (Emiddle)	348 lux
Sound power level at highest setting (Lwa)	69 dBA

Electrical Connection

Voltage	220-240 V
Frequency (Hz)	50-60 Hz
Power supply cable length	1500 mm

Plug	Not present

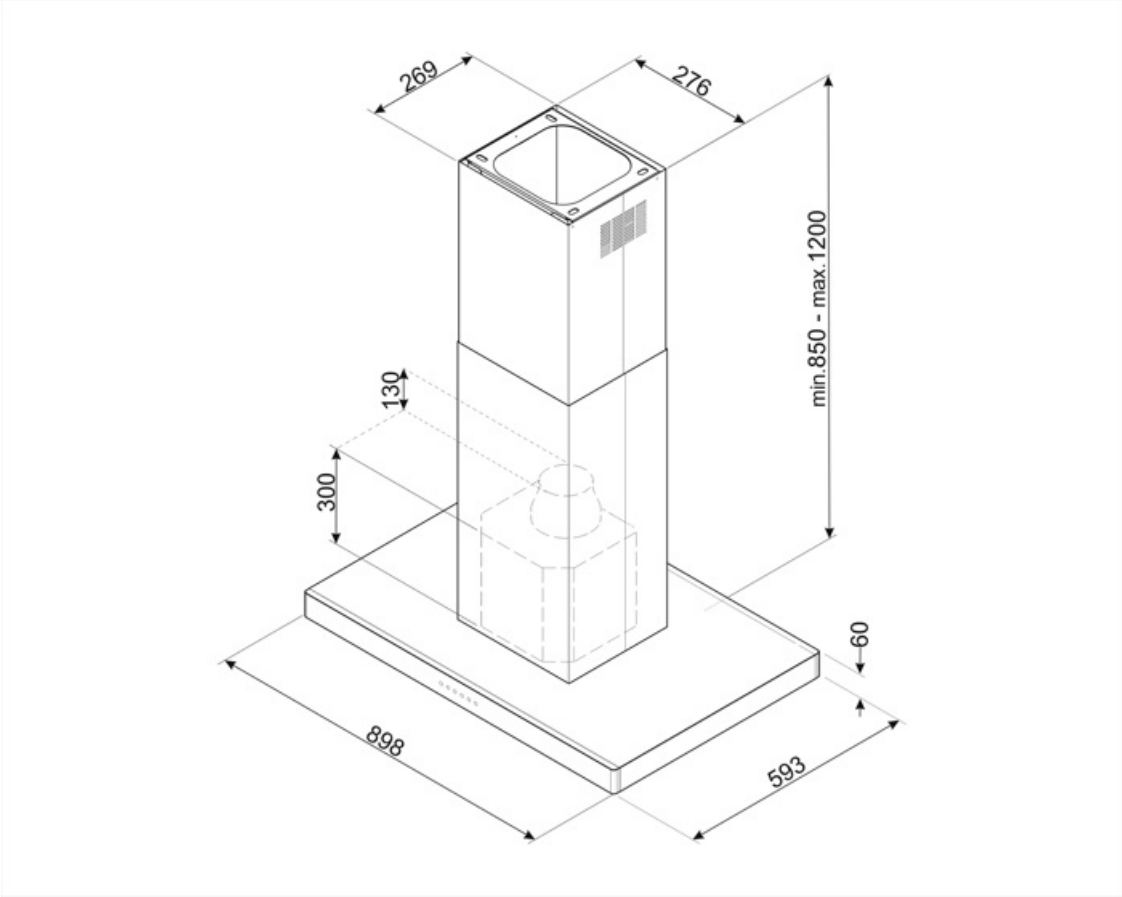

Compatible Accessories



KITALLFC

Universal Charcoal filter Stainless Steel AISI 304 The filter can be washed in dishwasher 50 °C (water and suitable detergent) and to dry it put in the oven 180°C 25 minutes

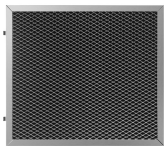

KITFCKBTR

1 pcs of Charcoal filter Regenerable* suitable for all the KBT/KBCT models. * It can be washed in the dishwasher up to 12 times and dry in the oven at max 90° for 60 min. dimension 237,5(H)x245x10 mm

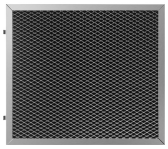

KITFCKBT

1 pc of charcoal filter for the hood models KBT* / KBCT*

Symbols glossary



24h: When selected this function refreshes the air for c. 10 minutes every hour over a 24 hour period, at minimum speed and an imperceptible noise level.



Energy efficiency class A



Warning light(s): to advise when filters need changing.



Touch controls: Easy to use touch controls allow the appliance to be programmed at the touch of a button.



Connection between hob and hood



Tunable white from warm to cold.



Filters: Model has filters to help remove grease from the steam emanating from the pans during cooking.



Switch off automatically: A special setting, to run after the end of cooking for a pre-set time and then switch off automatically.



Lights: All cooker hoods feature lights to illuminate the cooking area or add to the ambience of the kitchen.



Intensive/turbo setting: when extra fast extraction is required.



Dimmering Lights