KD90HXE

Product family	Hood
Hood Type	Decorative wall hood
Design	Chimney
Extraction	Extraction
Material	Stainless steel
Type of steel	Brushed
EAN code	8017709243593
Hood width	90 cm
Aesthetic	Classica
Colour	Stainless Steel
Finishing	Satin
Logo	Applied



Controls

Control setting	Control knobs	**Control knobs**	Classic
No. of controls	2	**Controls colour**	Steel effect

Program / Functions

No. of speeds	3
Intensive speed	BOOST

Technical Features

No. of lights	2	**No. of filters**	3
Light type	LED	**Anti-grease filters**	Stainless steel
Light Power	1 W	**Vent outlet**	150 mm
Light color temperature (K)	4000 K	**Minimum distance from GAS hob**	750 mm
Free outlet maximum capacity	815 m³/h	**Minimum distance from ELECTRIC hob**	650 mm
Motor power	275 W	**Non return valve**	Yes

	Extraction rate IEC 61591 [m³/h]	Noise level IEC 60704-2-13 [dBA]
Speed 1	288	48
Speed 2	421	63

Speed 3	630	67
Intensive speed	781	72

Performance / Energy Label



Annual Efficiency Consumption (AEChood)	40 kWh/a
Energy efficicency class (EEC)	A+
Fluid Dynamic Efficiency (FDE)	36,2
Fluid Dynamic Efficiency class (FDEC)	A
Lighting Efficiency (LE)	78,2 lux/W
Lighting Efficiency Class (LEC)	A
Grease Filtering Efficiency (GFE)	78,5 %
Grease Filtering Efficiency Class (GFEC)	C
Air flow at minumum speed (Qmin)	288 m³/h
Air flow at maximum speed (Qmax)	630 m³/h
Air flow at boost speed (Qboost)	781 m³/h

Airbourne acouistical A-weighted sound Power Emission at minimum speed (SPEmin)	48 dBA
Airborne acoustical A-weighted sound Power Emission at maximum speed (SPEmax)	67 dBA
Airbourne acoustical A-weighted sound power emission at boost speed (SPEboost)	72 dBA
Time increase factor (F)	1,00
Measured air flow rate at best efficiency point (Qbep)	413 m³/h
Measured air pressure at best efficiency point (Pbep)	476 Pa
Measured electric power input at best efficiency point (Wbep)	151 W
Nominal Power consumption of the light system (WL)	2 W
Average illumination of the light on the cooking surface (Emiddle)	172 lux
Sound power level at highest setting (Lwa)	67 dBA

Electrical Connection

Electrical connection rating	277 W
Voltage	220-240 V
Frequency (Hz)	50-60 Hz
Power supply cable length	1000 mm
Plug	Not present

Also available

Alternative colours available	Black, Anthracite
Available colours	KD90HNE - KD90HAE

Optional accessories

Charcoal filter FLT6

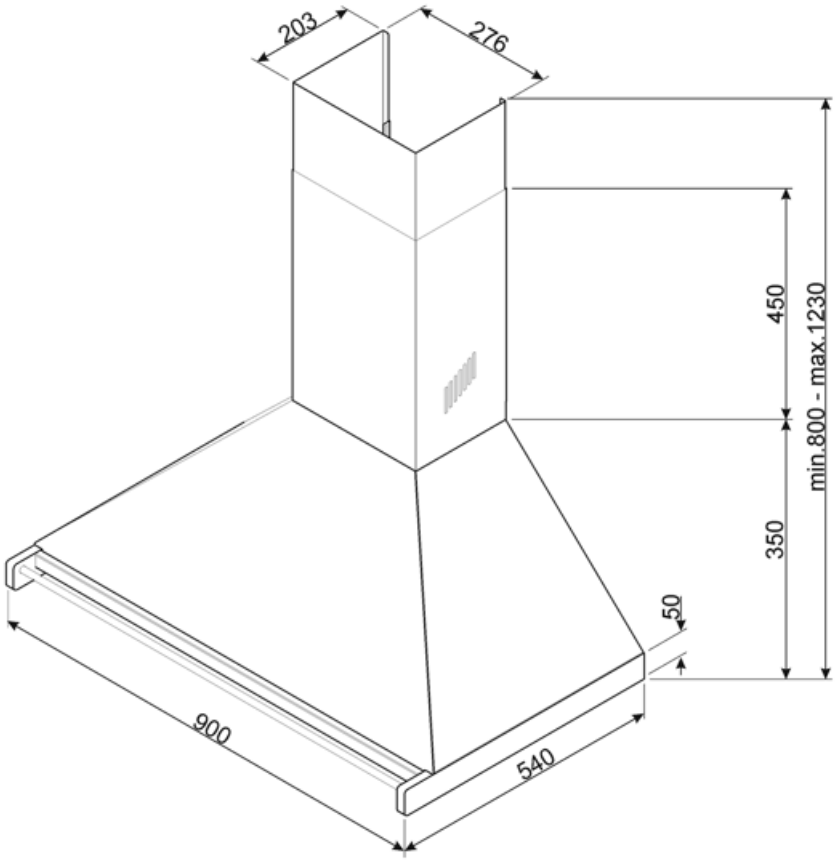

Compatible Accessories



FLT6

Round Charcoal filters (kit 2 pieces)



KITCMNKD

Chimney extension dimension 202.8 * 276 * 800



KITALLFC

Universal Charcoal filter Stainless Steel AISI 304 The filter can be washed in dishwasher 50 °C (water and suitable detergent) and to dry it put in the oven 180°C 25 minutes

Symbols glossary



A+: Energy efficiency class A+ helps to save up to 10% energy compared to class A. Maximum performance with minimum consumption is guaranteed.



Lights: All cooker hoods feature lights to illuminate the cooking area or add to the ambience of the kitchen.



Filters: Model has filters to help remove grease from the steam emanating from the pans during cooking.



Intensive/turbo setting: when extra fast extraction is required.