KDD60VXE-2



Product family	Hood
Hood Type	Downdraft Cooker Hoods
Design	Fully integrated
Extraction	Ducted out or re-circulation possible
Electronic control	Yes
Perimeter extraction	Yes
Material	Stainless steel
Type of steel	Brushed
EAN code	8017709223182
Hood width	60 cm
Aesthetics	Universal
Colour	Black
Finishing	Brushed
Glass Type	Black
Serigraphy colour	White
Logo	Silk screen

Controls

Control setting	Touch control	**Display**	Digital
Led colour	Red		

Program / Functions

No. of speeds	4
Intensive speed	BOOST
24h air filter function	24 hours
Time-setting options	

Technical Features

Remote motor	KITRBDD - Kit Optional	**Free outlet maximum capacity**	590 m³/h
No. of lights	1	**Motor power**	270 W
Light type	LED	**No. of filters**	2
Light power	7 W	**Anti-grease filters**	Aluminium
Dimmer mode	Yes	**Filter replacement indicator**	Yes
Light colour temperature scale (K)	4000 K		

Vent outlet	150 mm

	Extraction rate IEC 61591 [m³/h]	Noise level IEC 60704-2-13 [dBA]
Speed 1	135	44
Speed 2	230	52
Speed 3	295	57
Speed 4	375	62
Intensive speed	570	71

Accessories Included

Sliding door	Yes	**Tube reduction**	Yes

Performance / Energy Label



Annual Efficiency Consumption (AEChood)	73 kWh/year
Energy efficiency class (EEC)	B
Fluid Dynamic Efficiency (FDE)	22.4
Fluid Dynamic Efficiency class (FDEC)	C
Lighting Efficiency (LE)	29 lux/W
Lighting Efficiency Class (LEC)	A
Grease Filtering Efficiency (GFE)	55.1 %
Grease Filtering Efficiency Class (GFEC)	E
Air flow at minumum speed (Qmin)	135 m³/h
Maximum extraction rate	295 m³/h
Intensive extraction rate	570 m³/h

Airbourne acouistical A-weighted sound Power Emission at minimum speed (SPEmin)	44 dBA
Airborne acoustical A-weighted sound Power Emission at maximum speed (SPEmax)	57 dBA
Airbourne acoustical A-weighted sound power emission at boost speed (SPEboost)	71 dBA
Time increase factor (F)	1.2
Energy Efficiency Index per first cavity	69.9
Measured air flow rate at best efficiency point (Qbep)	293 m³/h
Measured air pressure at best efficiency point (Qbep)	429 Pa
Measured electric power input at best efficiency point (Wbep)	156 W
Normal Power of the light system (WI)	7 W
Average illumination of the light on the cooking surface (Emiddle)	200 lux
Sound power level at highest setting (Lwa)	57 dBA

Electrical Connection

Nominal power	277 W	**Power supply cable length**	1500 mm
Voltage	220-240 V		
Frequency (Hz)	50-60 Hz	**Plug**	(F;E) Schuko

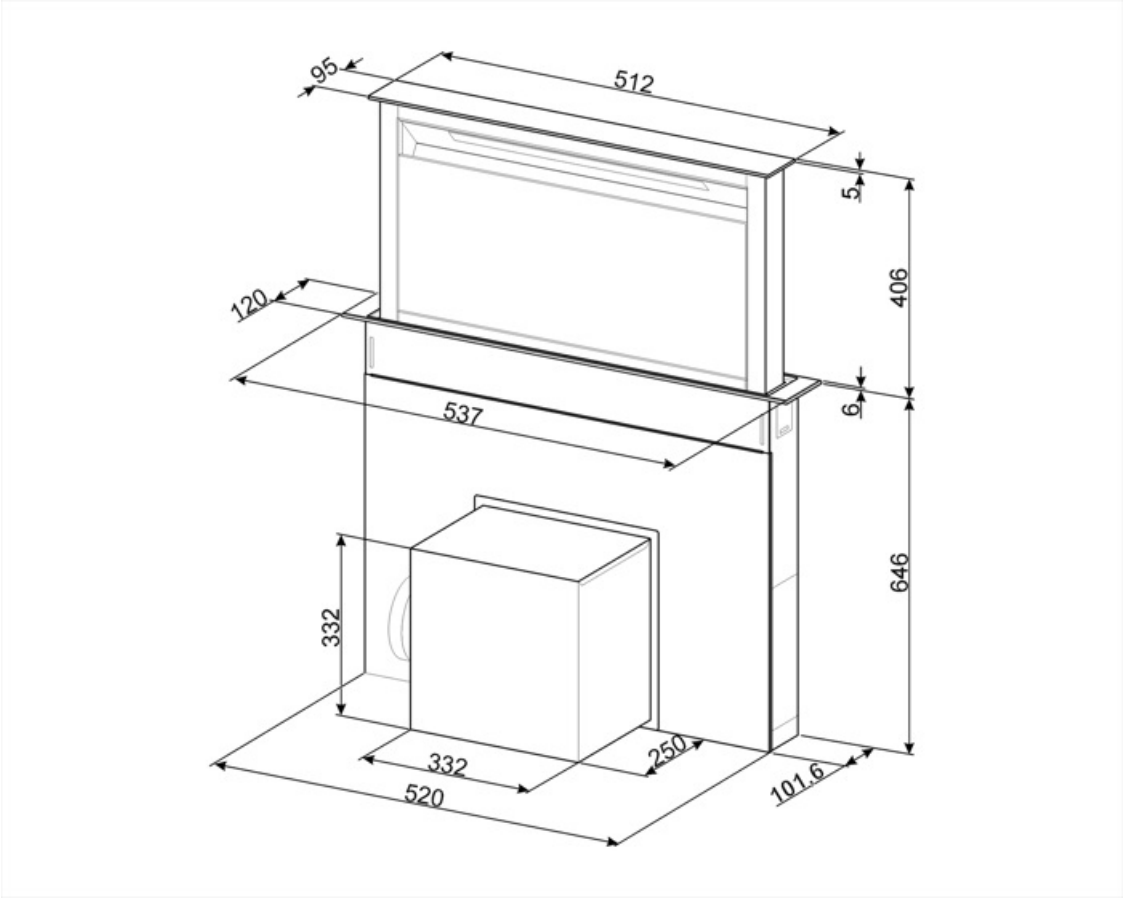

Compatible Accessories



KITFCDD60

Charcoal filter for hood Down Draft Kit 1 piece Dishwasher safe

KITRBDD

kit remote blower for DD hood



KITVENT150

Imbocco motore 150 mm con valvola di non ritorno



RCKF2

Remote control

Symbols glossary



24h: When selected this function refreshes the air for c. 10 minutes every hour over a 24 hour period, at minimum speed and an imperceptible noise level.



Switch off automatically: A special setting, to run after the end of cooking for a pre-set time and then switch off automatically.



Warning light(s): to advise when filters need changing.



Perimeter extraction panels: very efficient and aid noise reduction.



Intensive/turbo setting: when extra fast extraction is required.





Filters: Model has filters to help remove grease from the steam emanating from the pans during cooking.



Electronic display: to give a visual reminder of the options selected.



Lights: All cooker hoods feature lights to illuminate the cooking area or add to the ambience of the kitchen.



Touch controls: Easy to use touch controls allow the appliance to be programmed at the touch of a button.



Dimmering Lights