KDD90CNE2



Product family	Hood
Hood Type	DownDraft
Design	Fully integrated
Extraction	Extraction
Electronic control	Yes
Perimeter extraction	Yes
Material	Painted material
EAN code	8017709346126
Hood width	90 cm
Aesthetic	Universale
Colour	Black
Finishing	Glass
Glass Type	Black
Serigraphy colour	Silver
Logo	Silk screen

Controls

Control setting	Touch control	**Display**	Digital
Led color	White		

Program / Functions

No. of speeds	4
Intensive speed	BOOST
24h air filter function	24
Delay function	
Time-setting options	

Technical Features

Remote motor	KITRBDD - Kit Optional	**Free outlet maximum capacity**	740 m³/h
No. of lights	1	**Motor power**	250 W
Light type	LED	**No. of filters**	2
Light Power	5 W	**Anti-grease filters**	Aluminium
Dimmer mode	Yes	**Filter replacement indicator**	Yes
Light color temperature scale (K)	4000 K		

Vent outlet	150 mm

	Extraction rate IEC 61591 [m³/h]	Noise level IEC 60704-2-13 [dBA]
Speed 1	200	43
Speed 2	280	49
Speed 3	350	53
Speed 4	440	57
Intensive speed	720	68

Accessories Included

Remote control	Optional	**Tube reduction**	Yes
Motorised opening	Yes		

Performance / Energy Label



Annual Efficiency Consumption (AEChood)	57 kWh/a
Energy efficicency class (EEC)	A
Fluid Dynamic Efficiency (FDE)	29.30
Fluid Dynamic Efficiency class (FDEC)	A
Lighting Efficiency (LE)	40 lux/W
Lighting Efficiency Class (LEC)	A
Grease Filtering Efficiency (GFE)	65.1 %
Grease Filtering Efficiency Class (GFEC)	D
Air flow at minumum speed (Qmin)	200 m³/h
Air flow at maximum speed (Qmax)	350 m³/h
Air flow at boost speed (Qboost)	720 m³/h
Airbourne acouistical A-weighted sound Power Emission at minimum speed (SPEmin)	43 dBA
Airborne acoustical A-weighted sound Power Emission at maximum speed (SPEmax)	53 dBA
Airbourne acoustical A-weighted sound power emission at boost speed (SPEboost)	68 dBA
Time increase factor (F)	0.9
Energy Efficiency Index	53.1
Measured air flow rate at best efficiency point (Qbep)	398 m³/h
Measured air pressure at best efficiency point (Pbep)	429 Pa
Measured electric power input at best efficiency point (Wbep)	162 W
Nominal Power consumption of the light system (WL)	5 W
Average illumination of the light on the cooking surface (Emiddle)	200 lux
Sound power level at highest setting (Lwa)	49 dBA

Electrical Connection

Electrical connection rating	255 W	**Power supply cable length**	1500 mm
Voltage	220-240 V	**Plug**	(F;E) Schuko
Frequency (Hz)	50-60 Hz		

Also available

Alternative colours availible	White, Silver Glass

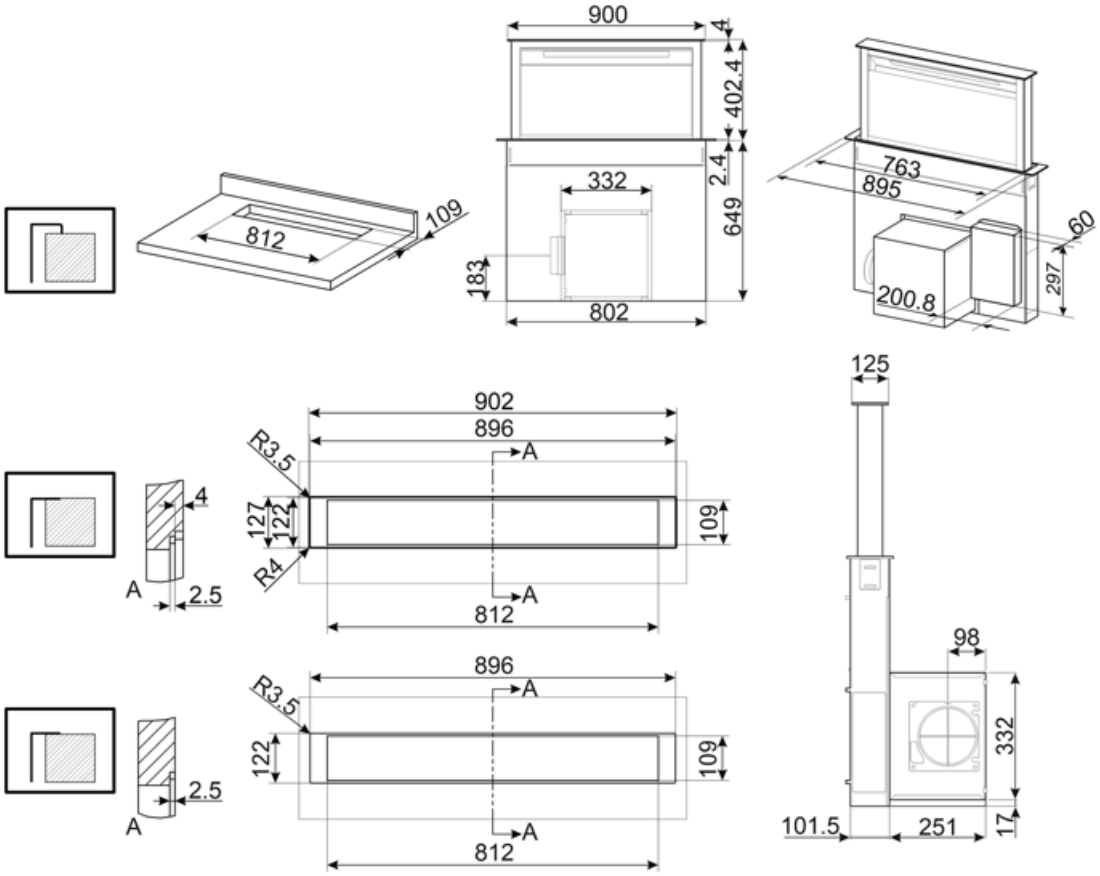

Compatible Accessories



KITFCDD

Charcoal filter for hood Down Draft Kit 1 piece Dishwasher safe

KITRBDD

kit remote blower for DD hood. Cable lenght: 7 meters.



RCKF2

Remote control

Symbols glossary



24h: When selected this function refreshes the air for c. 10 minutes every hour over a 24 hour period, at minimum speed and an imperceptible noise level.



Switch off automatically: A special setting, to run after the end of cooking for a pre-set time and then switch off automatically.



Delay timer: can be set to run the programme at a convenient time or to take advantage of off-peak energy periods.



Electronic display: to give a visual reminder of the options selected.



Lights: All cooker hoods feature lights to illuminate the cooking area or add to the ambience of the kitchen.



Touch controls: Easy to use touch controls allow the appliance to be programmed at the touch of a button.



Filters: Model has filters to help remove grease from the steam emanating from the pans during cooking.





Dimmering Lights



Warning light(s): to advise when filters need changing.



Perimeter extraction panels: very efficient and aid noise reduction.



Intensive/turbo setting: when extra fast extraction is required.