# KDE900EX

| | |
|---|---|
| **Product family** | Hood |
| **Hood Type** | Decorative wall hood |
| **Design** | Chimney |
| **Extraction** | Extraction |
| **Material** | Stainless steel |
| **Type of steel** | Brushed |
| **EAN code** | 8017709235161 |
| **Hood width** | 90 cm |
| **Aesthetic** | Universale |
| **Colour** | Stainless Steel |
| **Finishing** | Satin |
| **Components finishing** | Stainless steel |
| **Serigraphy colour** | Black |
| **Logo** | Silk screen |



## Controls

| | |
|---|---|
| **Control setting** | Buttons |

## Program / Functions

| | |
|---|---|
| **No. of speeds** | 3 |

## Technical Features

| | | | |
|---|---|---|---|
| **No. of lights** | 2 | **No. of filters** | 3 |
| **Light type** | LED | **Anti-grease filters** | Aluminium |
| **Light Power** | 3 W | **Vent outlet** | 150 mm |
| **Light color temperature (K)** | 2700 K | **Minimum distance from GAS hob** | 700 mm |
| **Free outlet maximum capacity** | 588 m³/h | **Minimum distance from ELECTRIC hob** | 500 mm |
| **Motor power** | 180 W | **Non return valve** | Yes |

| | Extraction rate IEC 61591 [m³/h] | Noise level IEC 60704-2-13 [dBA] |
|---|---|---|
| Speed 1 | 202 | 42 |
| Speed 2 | 307 | 52 |

| | | |
|---|---|---|
| Speed 3 | 553 | 65 |

## Accessories included

| | |
|---|---|
| **Tube reduction** | Yes |

## Performance / Energy Label



| | |
|---|---|
| **Annual Efficiency Consumption (AEChood)** | 103 kWh/a |
| **Energy efficicency class (EEC)** | D |
| **Fluid Dynamic Efficiency (FDE)** | 12,6 |
| **Fluid Dynamic Efficiency class (FDEC)** | E |
| **Lighting Efficiency (LE)** | 16,1 lux/W |
| **Lighting Efficiency Class (LEC)** | C |
| **Grease Filtering Efficiency (GFE)** | 76 % |
| **Grease Filtering Efficiency Class (GFEC)** | C |
| **Air flow at minumum speed (Qmin)** | 208 m³/h |
| **Air flow at maximum speed (Qmax)** | 559 m³/h |
| **Airbourne acouistical A-weighted sound Power Emission at minimum speed (SPEmin)** | 44 dBA |
| **Airborne acoustical A-weighted sound Power Emission at maximum speed (SPEmax)** | 67 dBA |
| **Time increase factor (F)** | 1,5 |
| **Measured air flow rate at best efficiency point (Qbep)** | 320 m³/h |
| **Measured air pressure at best efficiency point (Pbep)** | 255 Pa |
| **Measured electric power input at best efficiency point (Wbep)** | 180 W |
| **Nominal Power consumption of the light system (WL)** | 6 W |
| **Average illumination of the light on the cooking surface (Emiddle)** | 97 lux |
| **Sound power level at highest setting (Lwa)** | 67 dBA |

## Electrical Connection

| | |
|---|---|
| **Electrical connection rating** | 186 W |
| **Voltage** | 220-240 V |
| **Frequency (Hz)** | 50-60 Hz |
| **Power supply cable length** | 1500 mm |
| **Plug** | Not present |

## Optional accessories

| | |
|---|---|
| **Charcoal filter** | KITFC450 |

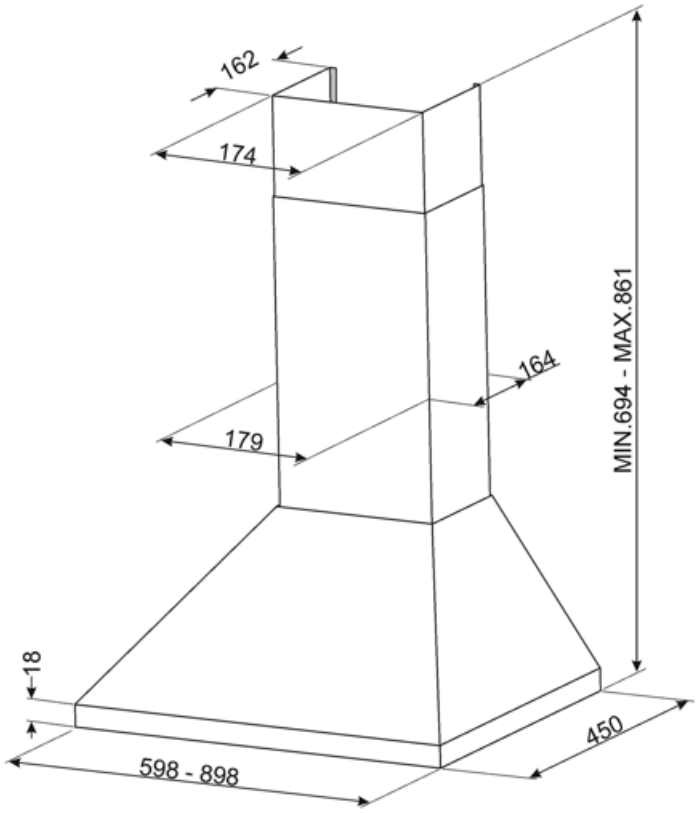
162
174
MIN.694 - MAX.861
164
179
18
598 - 898
450

## Compatible Accessories



**KITFC450**

Charcoal filters ROUND Kit 2 pieces

# Symbols glossary



Filters: Model has filters to help remove grease from the steam emanating from the pans during cooking.



Lights: All cooker hoods feature lights to illuminate the cooking area or add to the ambience of the kitchen.

