KFAB75RD

Product family	Hood
Hood Type	Decorative wall hood
Design	Angled
Extraction	Recirculation
Electronic control	Yes
Material	Painted material
Type of steel	Brushed
EAN code	8017709224882
Hood width	75 cm
Aesthetic	50's Style
Colour	Red
Finishing	Glossy
Logo	Applied



Controls

Control setting	Electronic buttons	**Led color**	White

Program / Functions

No. of speeds	3
Intensive speed	BOOST
Time-setting options	

Technical Features

No. of lights	2	**Anti-grease filters**	Stainless steel
Light type	LED	**Filter replacement indicator**	Yes
Light Power	1 W	**Vent outlet**	150 mm
Light color temperature (K)	4000 K	**Minimum distance from GAS hob**	650 mm
Free outlet maximum capacity	820 m³/h	**Minimum distance from ELECTRIC hob**	650 mm
Motor power	280 W	**Non return valve**	Yes
No. of filters	3		

	Extraction rate IEC 61591 [m³/h]	Noise level IEC 60704-2-13 [dBA]
Speed 1	333	50

Speed 2	477	59
Speed 3	649	67
Intensive speed	797	72

Accessories included



Remote control	Yes	**Charcoal filters included**	Yes
Motorised opening	Yes		

Performance / Energy Label



Annual Efficiency Consumption (AEChood)	36 kWh/a	**Airbourne acouistical A-weighted sound Power Emission at minimum speed (SPEmin)**	50 dBA
Energy efficicency class (EEC)	A+	**Airborne acoustical A-weighted sound Power Emission at maximum speed (SPEmax)**	67 dBA
Fluid Dynamic Efficiency (FDE)	36.6	**Airbourne acoustical A-weighted sound power emission at boost speed (SPEboost)**	72 dBA
Fluid Dynamic Efficiency class (FDEC)	A	**Time increase factor (F)**	0.7
Lighting Efficiency (LE)	68.2 lux/W	**Energy Efficiency Index**	39.7
Lighting Efficiency Class (LEC)	A	**Measured air flow rate at best efficiency point (Qbep)**	421 m³/h
Grease Filtering Efficiency (GFE)	61.1 %	**Measured air pressure at best efficiency point (Pbep)**	422 Pa
Grease Filtering Efficiency Class (GFEC)	E	**Measured electric power input at best efficiency point (Wbep)**	135 W
Air flow at minumum speed (Qmin)	333 m³/h	**Nominal Power consumption of the light system (WL)**	2 W
Air flow at maximum speed (Qmax)	649 m³/h	**Average illumination of the light on the cooking surface (Emiddle)**	150 lux
Air flow at boost speed (Qboost)	797 m³/h	**Sound power level at highest setting (Lwa)**	67 dBA

Electrical Connection

Battery type	Alkaline-Manganese Dioxide (Zn/MnO2)	**Frequency (Hz)**	50-60 Hz
		Power supply cable length	1500 mm

Electrical connection rating	282 W	**Plug**	Not present
Current	1 A		
Voltage	220-240 V		

Also available

Alternative colours available	White, Black, Cream, Blue	**Available colours**	KFAB75WH-KFAB75BL-KFAB75CR-KFAB75UJ

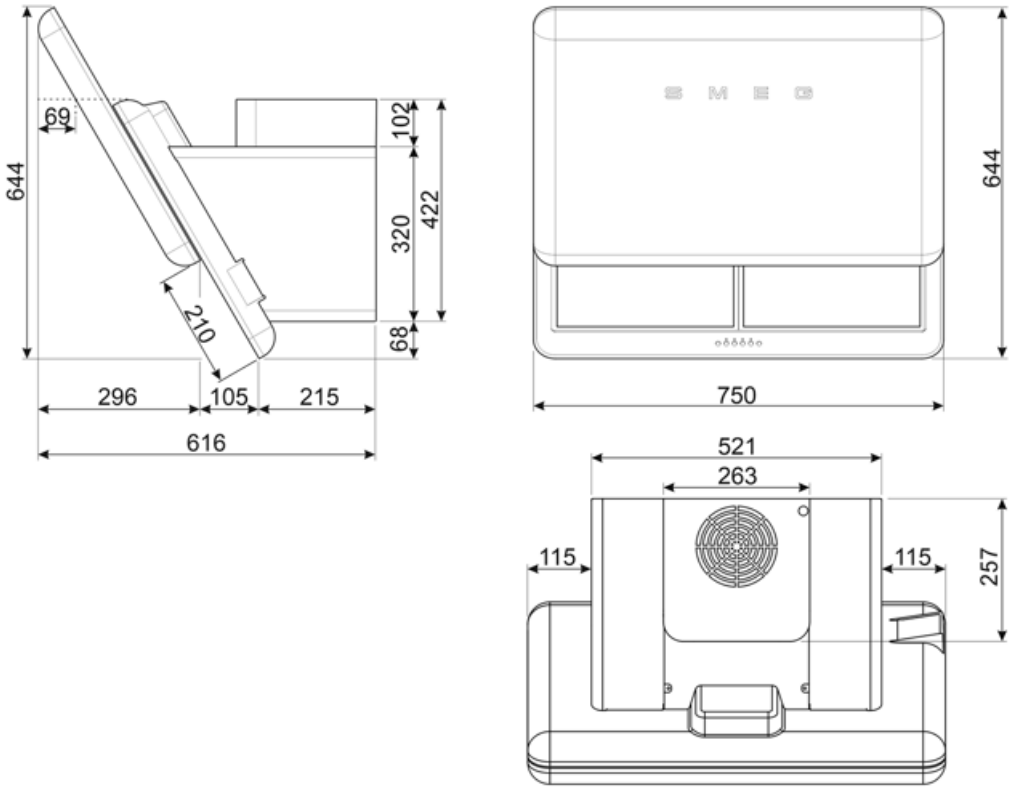

Compatible Accessories

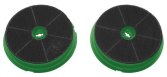

FLTSI

Charcoal filters Kit 2 pieces



KITCMNFABRD

Chimneys (2 pieces) Dimensions 550 min. 1035 max. (263x257) For KFAB75RD Red

Symbols glossary



Filters: Model has filters to help remove grease from the steam emanating from the pans during cooking.



A+: Energy efficiency class A+ helps to save up to 10% energy compared to class A. Maximum performance with minimum consumption is guaranteed.



Warning light(s): to advise when filters need changing.



Intensive/turbo setting: when extra fast extraction is required.



Switch off automatically: A special setting, to run after the end of cooking for a pre-set time and then switch off automatically.



Charcoal filters: Extracting through charcoal filters or directly to the exterior lessens strong cooking odours considerably.



Lights: All cooker hoods feature lights to illuminate the cooking area or add to the ambience of the kitchen.