KI90XE

Product family	Hood
Hood Type	Decorative island hood
Design	T flat
Extraction	Extraction
Electronic control	Yes
Material	Stainless steel
Type of steel	Brushed
EAN code	8017709204044
Hood width	90 cm
Aesthetic	Universale
Colour	Stainless Steel
Finishing	Satin
Logo	Embossed



Controls

Control setting	Electronic buttons	**Led color**	White

Program / Functions

No. of speeds	3
Intensive speed	BOOST
Time-setting options	

Technical Features

No. of lights	4	**Anti-grease filters**	Aluminium
Light type	LED	**Filter replacement indicator**	Yes
Light Power	1 W	**Vent outlet**	150 mm
Light color temperature (K)	4000 K	**Minimum distance from GAS hob**	750 mm
Free outlet maximum capacity	820 m³/h	**Minimum distance from ELECTRIC hob**	650 mm
Motor power	275 W	**Non return valve**	Yes
No. of filters	3		

	Extraction rate IEC 61591 [m³/h]	Noise level IEC 60704-2-13 [dBA]
Speed 1	311	49

Speed 2	385	59
Speed 3	533	63
Intensive speed	740	71

Accessories included

Tube reduction	Yes

Performance / Energy Label



Annual Efficiency Consumption (AEChood)	66 kWh/a
Energy efficicency class (EEC)	B
Fluid Dynamic Efficiency (FDE)	27,4
Fluid Dynamic Efficiency class (FDEC)	B
Lighting Efficiency (LE)	88,6 lux/W
Lighting Efficiency Class (LEC)	A
Grease Filtering Efficiency (GFE)	83,1 %
Grease Filtering Efficiency Class (GFEC)	C
Air flow at minumum speed (Qmin)	311 m³/h
Air flow at maximum speed (Qmax)	533 m³/h
Air flow at boost speed (Qboost)	740 m³/h

Airbourne acouistical A-weighted sound Power Emission at minimum speed (SPEmin)	49 dBA
Airborne acoustical A-weighted sound Power Emission at maximum speed (SPEmax)	63 dBA
Airbourne acoustical A-weighted sound power emission at boost speed (SPEboost)	71 dBA
Energy Efficiency Index	58,8
Measured air flow rate at best efficiency point (Qbep)	390 m³/h
Measured air pressure at best efficiency point (Pbep)	451 Pa
Measured electric power input at best efficiency point (Wbep)	171 W
Nominal Power consumption of the light system (WL)	4 W
Average illumination of the light on the cooking surface (Emiddle)	390 lux
Sound power level at highest setting (Lwa)	63 dBA

Electrical Connection

Electrical connection rating	279 W
Voltage	220-240 V
Frequency (Hz)	50-60 Hz
Power supply cable length	1500 mm
Plug	Not present

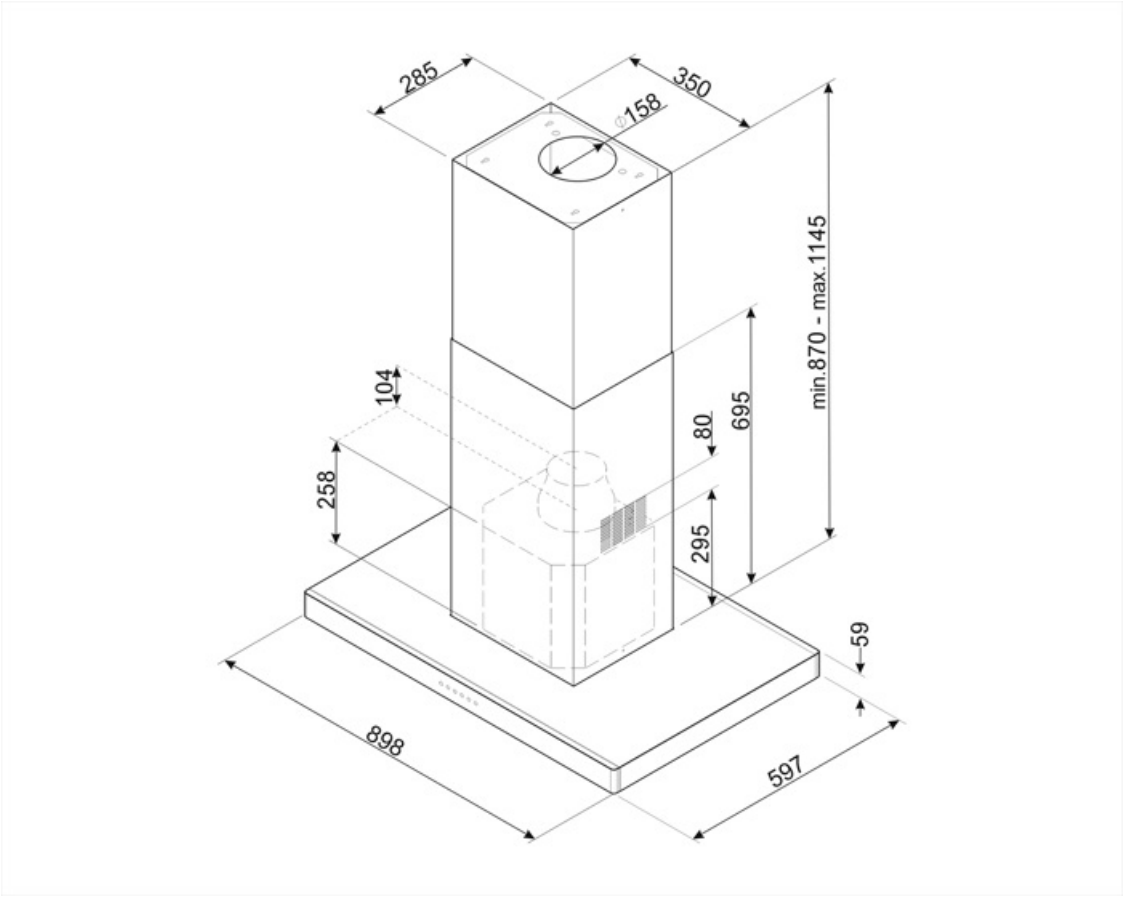
285
350
Φ158
min.870 - max.1145
104
80
695
258
295
59
898
597

Compatible Accessories



FLT6

Round Charcoal filters (kit 2 pieces)



KITALLFC

Universal Charcoal filter Stainless Steel AISI 304 The filter can be washed in dishwasher 50 °C (water and suitable detergent) and to dry it put in the oven 180°C 25 minutes

Symbols glossary



Filters: Model has filters to help remove grease from the steam emanating from the pans during cooking.



Warning light(s): to advise when filters need changing.



Intensive/turbo setting: when extra fast extraction is required.



Switch off automatically: A special setting, to run after the end of cooking for a pre-set time and then switch off automatically.



Lights: All cooker hoods feature lights to illuminate the cooking area or add to the ambience of the kitchen.

