KITRBDD

Family	Hoods
Type	Tube kit
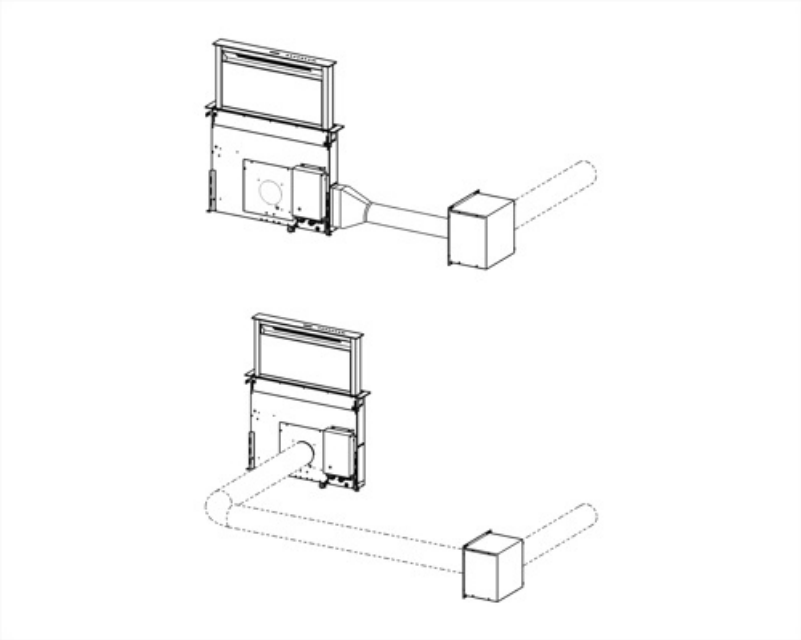
kit remote blower for DD hood