KLT12L4X

Product family	Hood
Hood Type	Ceiling hood
Design	Ceiling
Extraction	Extraction
Electronic control	Yes
Perimeter extraction	Yes
Material	Stainless steel
Type of steel	Brushed
EAN code	8017709326203
Hood width	120 cm
Aesthetic	Universale
Colour	Stainless Steel
Finishing	Satin
Logo	Silk screen

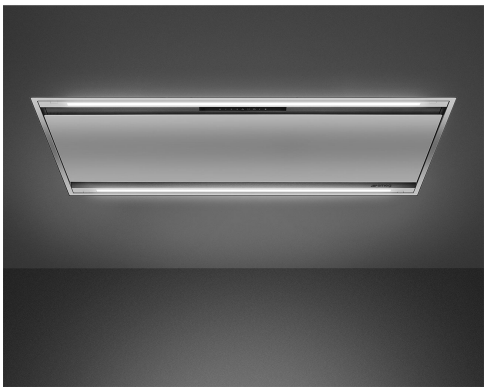

Controls

Control setting	Touch control back-lighted White

Program / Functions

No. of speeds	3
Intensive speed	
24h air filter function	
Time-setting options	
Auto-vent 2.0	

Technical Features

No. of lights	2
Light type	LED
Light Power	7.4 W
Dimmer mode	Yes
Light color temperature range	3000 - 5700 K
Free outlet maximum capacity	610 m³/h
Motor power	270 W

No. of filters	4
Anti-grease filters	Aluminium
Filter replacement indicator	Yes
Vent outlet	150 mm
Minimum distance from GAS hob	650 mm
Minimum distance from ELECTRIC hob	650 mm
Non return valve	Yes

	Extraction rate IEC 61591 [m³/h]	Noise level IEC 60704-2-13 [dBA]
Speed 1	194	51
Speed 2	315	57
Speed 3	447	65
Intensive speed	591	71

Accessories included

Remote control	Yes

Performance / Energy Label



Annual Efficiency Consumption (AEChood)	91 kWh/a
Energy efficicency class (EEC)	B
Fluid Dynamic Efficiency (FDE)	27.1
Fluid Dynamic Efficiency class (FDEC)	B
Lighting Efficiency (LE)	20.1 lux/W
Lighting Efficiency Class (LEC)	B
Grease Filtering Efficiency (GFE)	62.7 %
Grease Filtering Efficiency Class (GFEC)	E
Air flow at minumum speed (Qmin)	194 m³/h
Air flow at maximum speed (Qmax)	447 m³/h
Air flow at boost speed (Qboost)	591 m³/h

Airbourne acouistical A-weighted sound Power Emission at minimum speed (SPEmin)	51 dBA
Airborne acoustical A-weighted sound Power Emission at maximum speed (SPEmax)	66 dBA
Airbourne acoustical A-weighted sound power emission at boost speed (SPEboost)	71 dBA
Time increase factor (F)	1.0
Energy Efficiency Index	63.0
Measured air flow rate at best efficiency point (Qbep)	339.3 m³/h
Measured air pressure at best efficiency point (Pbep)	632 Pa
Measured electric power input at best efficiency point (Wbep)	219.5 W
Nominal Power consumption of the light system (WL)	14.8 W
Average illumination of the light on the cooking surface (Emiddle)	298 lux
Sound power level at highest setting (Lwa)	66 dBA

Electrical Connection

Electrical connection rating	305 W	**Power supply cable length**	1500 mm
Voltage	220-240 V	**Plug**	Not present
Frequency (Hz)	50-60 Hz		

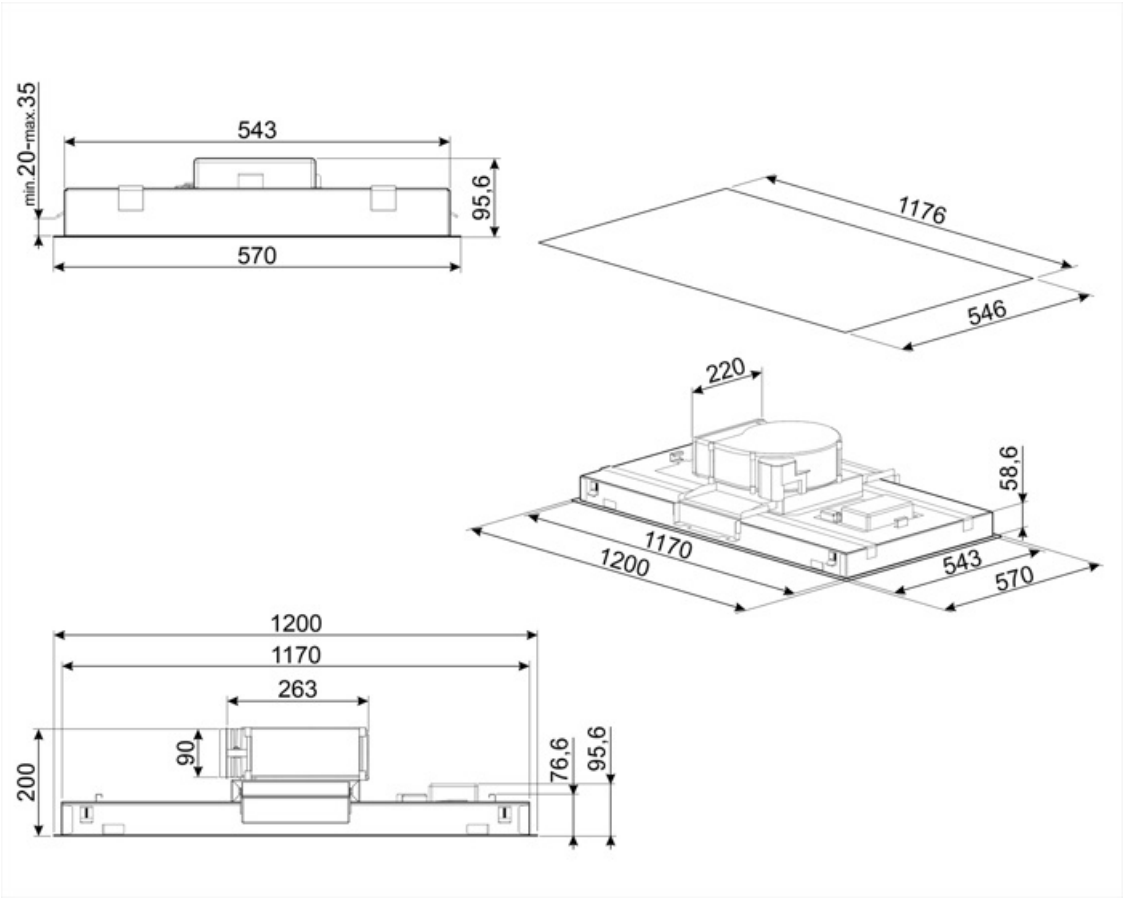

Compatible Accessories



KITALLFC

Universal Charcoal filter Stainless Steel AISI 304 The filter can be washed in dishwasher 50 °C (water and suitable detergent) and to dry it put in the oven 180°C 25 minutes



RRA90

Round to rectangular adapter 220x90 mm to 150 Ø

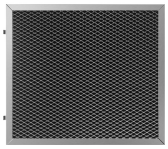

KITFCKLTR

1 pcs of Charcoal filter Regenerable* suitable for all the KLT* models. * It can be washed in the dishwasher up to 12 times and dry in the oven at max 90° for 60 min. dimension 235(H)x 200 (L) x 10 (D) mm

Symbols glossary



24h: When selected this function refreshes the air for c. 10 minutes every hour over a 24 hour period, at minimum speed and an imperceptible noise level.



Switch off automatically: A special setting, to run after the end of cooking for a pre-set time and then switch off automatically.



Lights: All cooker hoods feature lights to illuminate the cooking area or add to the ambience of the kitchen.



Intensive/turbo setting: when extra fast extraction is required.



Dimmering Lights





Filters: Model has filters to help remove grease from the steam emanating from the pans during cooking.



Warning light(s): to advise when filters need changing.



Perimeter extraction panels: very efficient and aid noise reduction.



Connection between hob and hood



Tunable white from warm to cold.