# KLT9L4X



| | |
|---|---|
| **Product family** | Hood |
| **Hood Type** | Ceiling hood |
| **Design** | Ceiling |
| **Extraction** | Extraction |
| **Electronic control** | Yes |
| **Perimeter extraction** | Yes |
| **Material** | Stainless steel |
| **Type of steel** | Brushed |
| **EAN code** | 8017709326227 |
| **Hood width** | 90 cm |
| **Aesthetic** | Universale |
| **Colour** | Stainless Steel |
| **Finishing** | Satin |
| **Logo** | Silk screen |

## Controls

| | |
|---|---|
| **Control setting** | Touch control back-lighted<br>White |

## Program / Functions

| | |
|---|---|
| **No. of speeds** | 3 |
| **Intensive speed** | |
| **24h air filter function** | |
| **Time-setting options** | |
| **Auto-vent 2.0** | |

## Technical Features

| | | | |
|---|---|---|---|
| **No. of lights** | 2 | **No. of filters** | 3 |
| **Light type** | LED | **Anti-grease filters** | Aluminium |
| **Light Power** | 7.4 W | **Filter replacement indicator** | Yes |
| **Light color temperature (K)** | 3000 K | **Vent outlet** | 150 mm |
| **Light color temperature range** | 3000 - 5700 K | **Minimum distance from GAS hob** | 650 mm |
| **Free outlet maximum capacity** | 610 m³/h | **Minimum distance from ELECTRIC hob** | 650 mm |
| **Motor power** | 270 W | **Non return valve** | Yes |

| | Extraction rate IEC 61591 [m³/h] | Noise level IEC 60704-2-13 [dBA] |
|---|---|---|
| Speed 1 | 208 | 48 |
| Speed 2 | 323 | 55 |
| Speed 3 | 452 | 62 |
| Intensive speed | 594 | 69 |

## Accessories included

| | |
|---|---|
| **Remote control** | Yes |

## Performance / Energy Label



| | |
|---|---|
| **Annual Efficiency Consumption (AEChood)** | 94 kWh/a |
| **Energy efficicency class (EEC)** | B |
| **Fluid Dynamic Efficiency (FDE)** | 25.9 |
| **Fluid Dynamic Efficiency class (FDEC)** | B |
| **Lighting Efficiency (LE)** | 25.9 lux/W |
| **Lighting Efficiency Class (LEC)** | B |
| **Grease Filtering Efficiency (GFE)** | 72.0 % |
| **Grease Filtering Efficiency Class (GFEC)** | D |
| **Air flow at minumum speed (Qmin)** | 208 m³/h |
| **Air flow at maximum speed (Qmax)** | 452 m³/h |
| **Air flow at boost speed (Qboost)** | 594 m³/h |

| | |
|---|---|
| **Airbourne acouistical A-weighted sound Power Emission at minimum speed (SPEmin)** | 48 dBA |
| **Airborne acoustical A-weighted sound Power Emission at maximum speed (SPEmax)** | 63 dBA |
| **Airbourne acoustical A-weighted sound power emission at boost speed (SPEboost)** | 69 dBA |
| **Time increase factor (F)** | 1.1 |
| **Energy Efficiency Index** | 68.7 |
| **Measured air flow rate at best efficiency point (Qbep)** | 335 m³/h |
| **Measured air pressure at best efficiency point (Pbep)** | 630 Pa |
| **Measured electric power input at best efficiency point (Wbep)** | 226 W |
| **Nominal Power consumption of the light system (WL)** | 15 W |
| **Average illumination of the light on the cooking surface (Emiddle)** | 303 lux |
| **Sound power level at highest setting (Lwa)** | 63 dBA |

## Electrical Connection

| | | | |
|---|---|---|---|
| **Electrical connection rating** | 305 W | **Power supply cable length** | 1500 mm |
| **Voltage** | 220-240 V | **Plug** | Not present |
| **Frequency (Hz)** | 50-60 Hz | | |

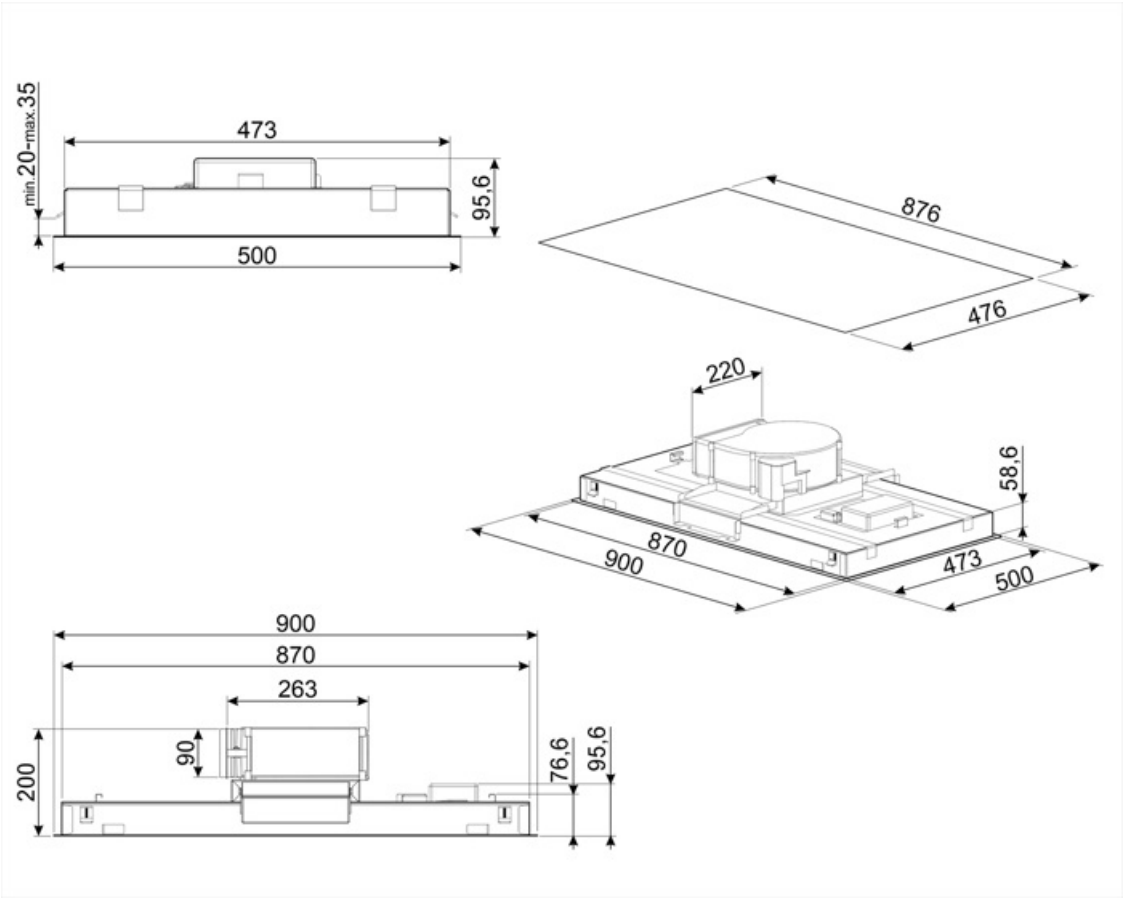

## Compatible Accessories



**KITALLFC**

Universal Charcoal filter  Stainless Steel AISI 304  The filter can be washed in dishwasher 50 °C (water and suitable detergent)  and to dry it put in the oven 180°C 25 minutes



**RRA90**

Round to rectangular adapter 220x90 mm to 150 Ø

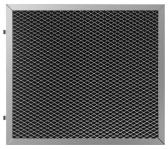

**KITFCKLTR**

1 pcs of Charcoal filter Regenerable* suitable for all the KLT* models. * It can be washed in the dishwasher up to 12 times and dry in the oven at max 90° for 60 min. dimension 235(H )x 200 (L) x 10 (D) mm

## Symbols glossary



24h: When selected this function refreshes the air for c. 10 minutes every hour over a 24 hour period, at minimum speed and an imperceptible noise level.



Switch off automatically: A special setting, to run after the end of cooking for a pre-set time and then switch off automatically.



Lights: All cooker hoods feature lights to illuminate the cooking area or add to the ambience of the kitchen.




Intensive/turbo setting: when extra fast extraction is required.



Tunable white from warm to cold.



Filters: Model has filters to help remove grease from the steam emanating from the pans during cooking.



Warning light(s): to advise when filters need changing.



Perimeter extraction panels: very efficient and aid noise reduction.



Connection between hob and hood

