KS89AOE

Product family	Hood
Hood Type	Decorative wall hood
Design	Chimney
Extraction	Extraction
Material	Painted material
Type of steel	Brushed
EAN code	8017709211868
Hood width	90 cm

Aesthetics

Aesthetic	Coloniale	**Components finishing**	Antique brass
Colour	Anthracite	**Logo**	Applied

Controls

Control setting	Control knobs	**Control knobs**	Colonial
No. of controls	2	**Controls colour**	Old Brass

Programme / Functions

No. of speeds	3
Intensive speed	BOOST

Technical Features

No. of lights	2	**No. of filters**	3
Light type	LED	**Anti-grease filters**	Stainless steel
Light Power	1 W	**Vent outlet**	150 mm
Light color temperature scale (°K)	3000 °K	**Minimum distance from GAS hob**	750 mm
Free outlet maximum capacity	820 m³/h	**Minimum distance from ELECTRIC hob**	650 mm
Motor power	275 W	**Non return valve**	Yes

	Extraction rate IEC 61591 [m³/h]	Noise level IEC 60704-2-13 [dB(A)]
Speed 1	331	52
Speed 2	439	57
Speed 3	547	63
Intensive speed	788	71

Performance / Energy Label

A

Annual Efficiency Consumption (AEChood)	55 kWh/a
Energy efficicency class (EEC)	A
Fluid Dynamic Efficiency (FDE)	31
Fluid Dynamic Efficiency class (FDEC)	A
Lighting Efficiency (LE)	90,9 lux/W
Lighting Efficiency Class (LEC)	A
Grease Filtering Efficiency (GFE)	80,1 %
Grease Filtering Efficiency Class (GFEC)	C
Air flow at minumum speed (Qmin)	331 m³/h
Air flow at maximum speed (Qmax)	547 m³/h
Air flow at boost speed (Qboost)	788 m³/h
Airbourne acouistical A-weighted sound Power Emission at minimum speed (SPEmin)	52 dB(A)
Airborne acoustical A-weighted sound Power Emission at maximum speed (SPEmax)	63 dB(A)
Airbourne acoustical A-weighted sound power emission at boost speed (SPEboost)	71 dB(A)
Time increase factor (F)	0,9
Energy Efficiency Index	51,9
Measured air flow rate at best efficiency point (Qbep)	406 m³/h
Measured air pressure at best efficiency point (Pbep)	449 Pa
Measured electric power input at best efficiency point (Wbep)	164 W
Nominal Power consumption of the light system (WL)	2 W
Average illumination of the light on the cooking surface (Emiddle)	200 lux
Sound power level at highest setting (Lwa)	63 dB(A)

Electrical Connection

Electrical connection rating	277 W
Voltage	220-240 V
Frequency (Hz)	50-60 Hz
Power supply cable length	1000 mm

Also available

Alternative colours availible	Cream, Gunmetal, Copper	**Available colours**	KS89POE-KS89PE-KS89DE-KS89RAE-KS89AE

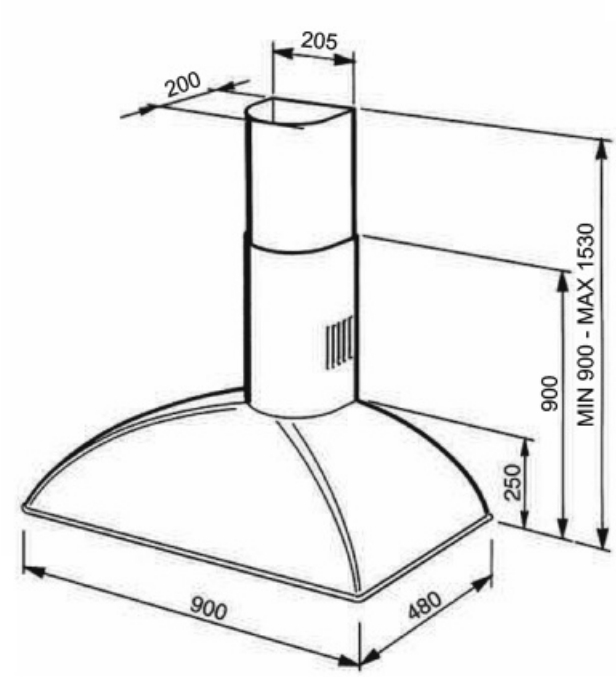

Not included accessories

FLT6

Round Charcoal filters (kit 2 pieces)

KITALLFC

Universal Charcoal filter Stainless Steel AISI 304 The filter can be washed in dishwasher 50 °C (water and suitable detergent) and to dry it put in the oven 180°C 25 minutes

Symbols glossary (TT)

Filters: Model has filters to help remove grease from the steam emanating from the pans during cooking.

A: Product drying performance, measured from A+++ to D / G depending on the product family

Lights: All cooker hoods feature lights to illuminate the cooking area or add to the ambience of the kitchen.

Intensive/turbo setting: when extra fast extraction is required.