KS9500XE

Product family	Hood
Hood Type	Decorative wall hood
Design	T flat
Extraction	Extraction
Electronic control	Yes
Material	Stainless steel
Type of steel	Brushed
EAN code	8017709201814
Hood width	90 cm
Aesthetic	Universale
Colour	Stainless Steel
Finishing	Satin
Logo	Embossed



Controls

Control setting	Electronic buttons

Program / Functions

No. of speeds	3
Intensive speed	BOOST
Time-setting options	

Technical Features

No. of lights	2	**No. of filters**	3
Light type	LED	**Anti-grease filters**	Aluminium
Light Power	2 W	**Filter replacement indicator**	Yes
Light color temperature (K)	4000 K	**Vent outlet**	150 mm
Free outlet maximum capacity	800 m³/h	**Non return valve**	Yes
Motor power	275 W		

	Extraction rate IEC 61591 [m³/h]	Noise level IEC 60704-2-13 [dBA]
Speed 1	307	53
Speed 2	395	58

Speed 3	558	67
Intensive speed	759	73

Performance / Energy Label



Annual Efficiency Consumption (AEChood)	54 kWh/a
Energy efficicency class (EEC)	A
Fluid Dynamic Efficiency (FDE)	29.2
Fluid Dynamic Efficiency class (FDEC)	A
Lighting Efficiency (LE)	95.9 lux/W
Lighting Efficiency Class (LEC)	A
Grease Filtering Efficiency (GFE)	78.9 %
Grease Filtering Efficiency Class (GFEC)	C
Air flow at minumum speed (Qmin)	307 m³/h
Air flow at maximum speed (Qmax)	558 m³/h
Air flow at boost speed (Qboost)	759 m³/h

Airbourne acouistical A-weighted sound Power Emission at minimum speed (SPEmin)	53 dBA
Airborne acoustical A-weighted sound Power Emission at maximum speed (SPEmax)	67 dBA
Airbourne acoustical A-weighted sound power emission at boost speed (SPEboost)	73 dBA
Time increase factor (F)	0.9
Measured air flow rate at best efficiency point (Qbep)	376 m³/h
Measured air pressure at best efficiency point (Pbep)	449 Pa
Measured electric power input at best efficiency point (Wbep)	160 W
Nominal Power consumption of the light system (WL)	2 W
Average illumination of the light on the cooking surface (Emiddle)	211 lux
Sound power level at highest setting (Lwa)	67 dBA

Electrical Connection

Electrical connection rating	278 W
Voltage	220-240 V
Frequency (Hz)	50-60 Hz

Power supply cable length	1000 mm
Plug	Not present

Also available

Alternative colours available	Black, Cream

Available colours	KS9500BLE - KS9500PE

Optional accessories

Charcoal filter FLT4

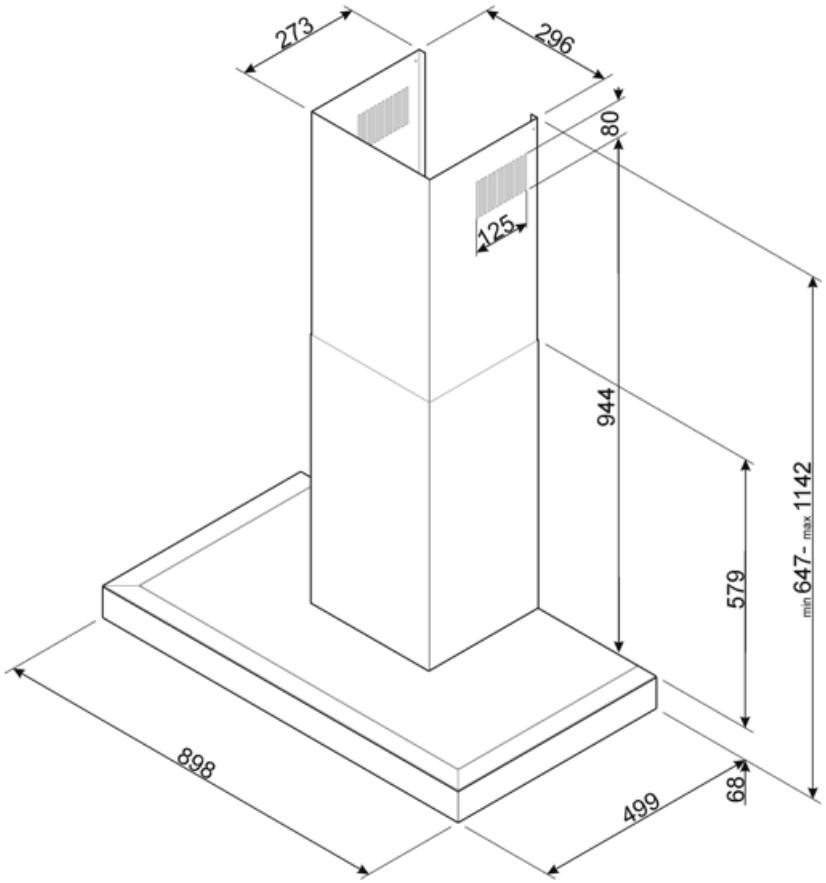

Compatible Accessories

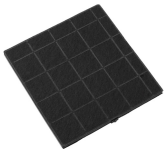

FLT4

Charcoal filter Kit 1 piece



KITALLFC

Universal Charcoal filter Stainless Steel AISI 304 The filter can be washed in dishwasher 50 °C (water and suitable detergent) and to dry it put in the oven 180°C 25 minutes

Symbols glossary



Filters: Model has filters to help remove grease from the steam emanating from the pans during cooking.



Energy efficiency class A



Lights: All cooker hoods feature lights to illuminate the cooking area or add to the ambience of the kitchen.



Switch off automatically: A special setting, to run after the end of cooking for a pre-set time and then switch off automatically.



Warning light(s): to advise when filters need changing.



Intensive/turbo setting: when extra fast extraction is required.