KSEC61BE3

Product family	Hood
Hood Type	Integrated (semi) hood
Design	Visible front panel
Extraction	Extraction
Material	Painted material
EAN code	8017709343316
Hood width	60 cm
Aesthetic	Universale
Colour	White
Serigraphy colour	Black
Logo	Silk screen



Controls

Control setting	Slider

Program / Functions

No. of speeds	3

Technical Features

No. of lights	2	**No. of filters**	1
Light type	LED	**Anti-grease filters**	Metallic multilayer
Light Power	4 W	**Vent outlet**	120 mm
Light color temperature (K)	4000 K	**Minimum distance from GAS hob**	650 mm
Free outlet maximum capacity	315 m³/h	**Minimum distance from ELECTRIC hob**	450 mm
Motor power	115 W		

	Extraction rate IEC 61591 [m³/h]	Noise level IEC 60704-2-13 [dBA]
Speed 1	170	58
Speed 2	240	66

Speed 3	305	72

Accessories included



Charcoal filters included Yes

Performance / Energy Label



Annual Efficiency Consumption (AEChood)	60 kWh/a
Energy efficicency class (EEC)	C
Fluid Dynamic Efficiency (FDE)	10
Fluid Dynamic Efficiency class (FDEC)	E
Lighting Efficiency (LE)	11 lux/W
Lighting Efficiency Class (LEC)	E
Grease Filtering Efficiency (GFE)	40 %
Grease Filtering Efficiency Class (GFEC)	G
Air flow at minumum speed (Qmin)	170 m³/h
Air flow at maximum speed (Qmax)	305 m³/h
Airbourne acouistical A-weighted sound Power Emission at minimum speed (SPEmin)	58 dBA
Airborne acoustical A-weighted sound Power Emission at maximum speed (SPEmax)	72 dBA
Time increase factor (F)	1,6
Energy Efficiency Index	84,8
Measured air flow rate at best efficiency point (Qbep)	167 m³/h
Measured air pressure at best efficiency point (Pbep)	198 Pa
Measured electric power input at best efficiency point (Wbep)	92 W
Nominal Power consumption of the light system (WL)	8 W
Average illumination of the light on the cooking surface (Emiddle)	90 lux
Sound power level at highest setting (Lwa)	72 dBA

Electrical Connection

Electrical connection rating	133 W	**Power supply cable length**	1500 mm
Voltage	220-240 V	**Plug**	Not present
Frequency (Hz)	50-60 Hz		

Also available

Alternative colours available	Black, Stainless steel	**Available colours**	KSEC61NE3 - KSEC61XE3

Optional accessories

Charcoal filter Yes

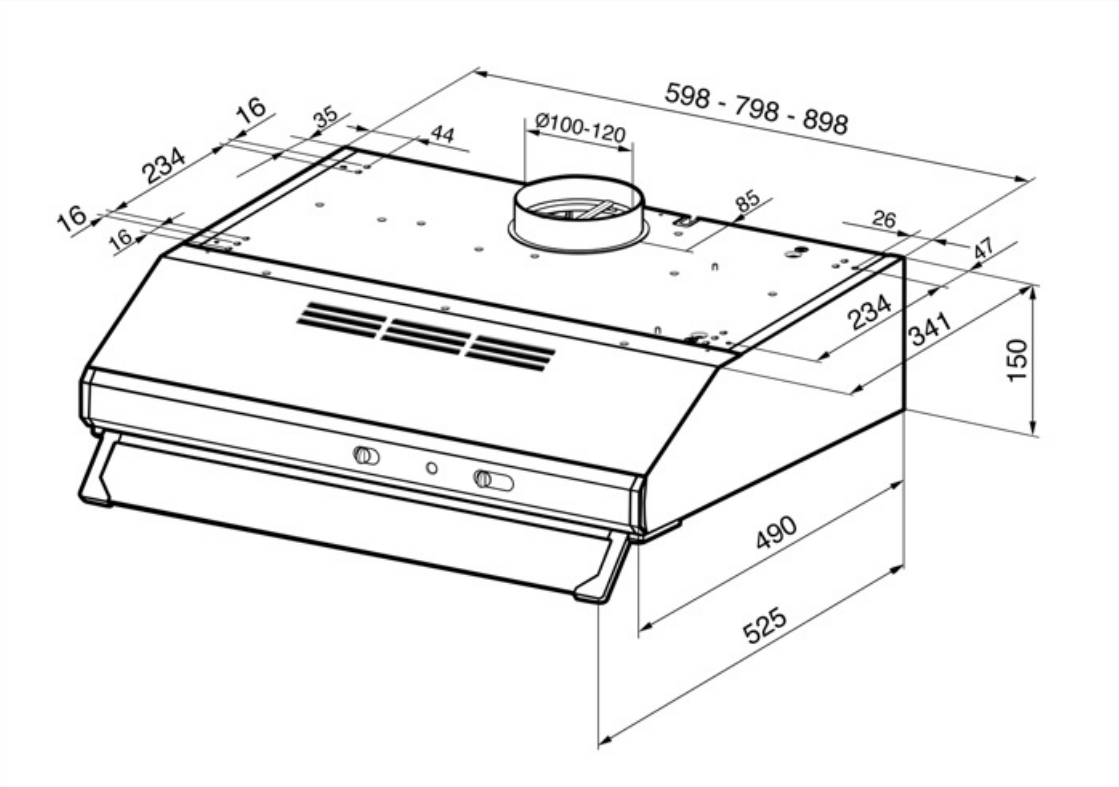

Compatible Accessories



KITFC111

Charcoal filters round Kit 1 piece

Symbols glossary



Filters: Model has filters to help remove grease from the steam emanating from the pans during cooking.



Lights: All cooker hoods feature lights to illuminate the cooking area or add to the ambience of the kitchen.



Charcoal filters: Extracting through charcoal filters or directly to the exterior lessens strong cooking odours considerably.

