KSEC61XE2

Product family	Hood
Tipo de Exaustor	Integrated (semi) hood
Design	Visible front panel
Extraction	Extraction
Electronic control	No
Perimeter extraction	No
Material	Stainless Steel + Painted Material
EAN code	8017709274863
Aesthetic	Universal
Colour	Stainless steel/Black
Cor da serigrafia	Serigrafia em preto
Logotipo	Logotipo serigrafado

Controls

Control setting	Slider

Program / Functions

No. of speeds	3
Intensive speed	No
24h air filter function	No
Other functions	No
Time-setting options	No
Other options	No
Ventilação automática	No

Technical Features

Hood witout motor	No
Remote motor	No
No. of lights	2
Light type	LED
Light Power	4 W
Dimmer mode	No
Free outlet maximum capacity	300 m³/h
Motor power	125 W
No. of filters	1
Anti-grease filters	Aluminium
Charcoal filters included	No
Filter replacement indicator	No
Vent outlet	120 mm
Minimum distance from GAS hob	650 mm
Minimum distance from ELECTRIC hob	500 mm
Non return valve	No

	Extraction rate IEC 61591 [m³/h]	Noise level IEC 60704-2-13 [dBA]
Speed 1	135	56
Speed 2	200	64
Speed 3	285	69

Accessories Included

Remote control	No	**Tube reduction**	No
Sliding door	No		

Performance / Energy Label

Consumo anual de energia (CAE exaustor)	67 kWh/a
Energy efficicency class (EEC)	D
Fluid Dynamic Efficiency (FDE)	8,1
Fluid Dynamic Efficiency class (FDEC)	E
Lighting Efficiency (LE)	11 lux/W
Lighting Efficiency Class (LEC)	E
Grease Filtering Efficiency (GFE)	40 %
Grease Filtering Efficiency Class (GFEC)	G
Air flow at minumum speed (Qmin)	135 m³/h
Air flow at maximum speed (Qmax)	285 m³/h
Airbourne acouistical A-weighted sound Power Emission at minimum speed (SPEmin)	56 dBA
Airborne acoustical A-weighted sound Power Emission at maximum speed (SPEmax)	69 dBA
Time increase factor (F)	1,7
Energy Efficiency Index	90,5
Measured air flow rate at best efficiency point (Qbep)	149 m³/h
Measured air pressure at best efficiency point (Pbep)	193 Pa
Measured electric power input at best efficiency point (Wbep)	99 W
Nominal Power consumption of the light system (WL)	8 W
Average illumination of the light on the cooking surface (Emiddle)	90 lux
Sound power level at highest setting (Lwa)	69 dBA

Electrical Connection

Plug	No	**Frequency (Hz)**	50 Hz
Electrical connection rating	133 W	**Comprimento do cabo de alimentação**	1000 mm
Voltage	220-240 V		

Also available

Outras cores disponíveis	Branca, Preta	**Códigos das outras cores disponíveis**	KSEC61EB2 - KSEC61NE2

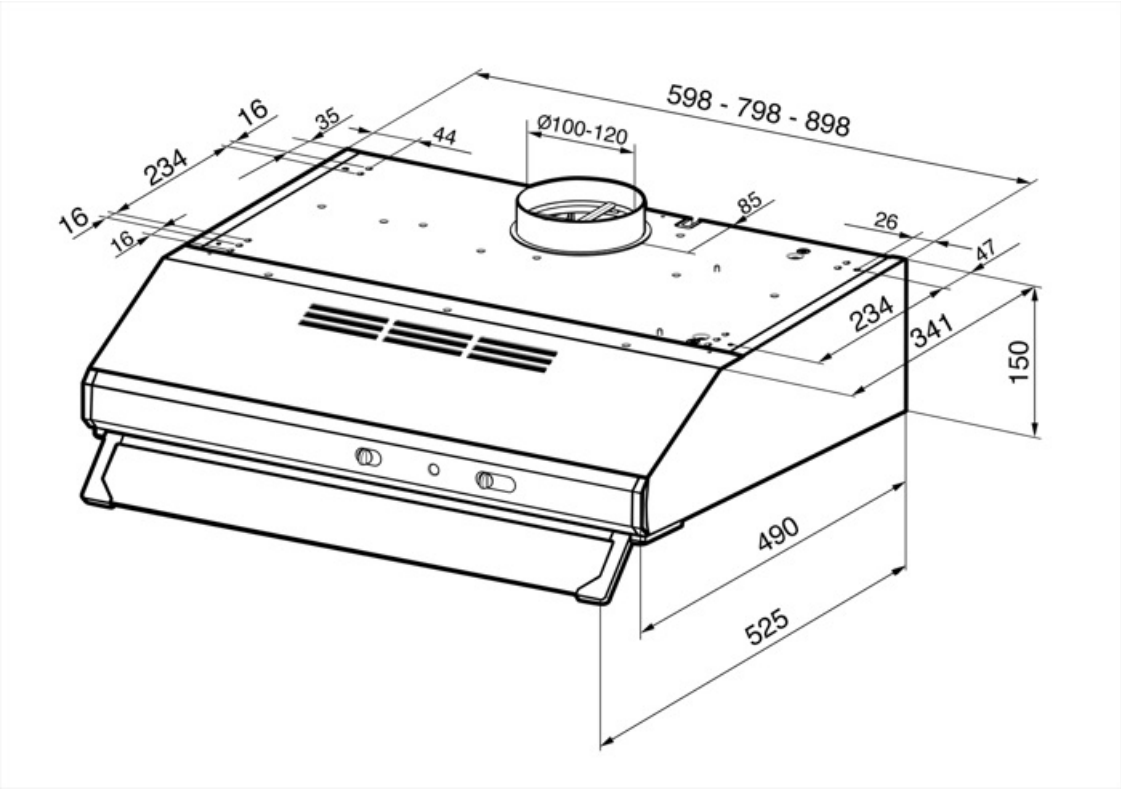

Compatible Accessories

KITFC111

Filtros de carvão redondos Kit 1 peça

Symbols glossary

Filtros: O modelo tem filtros para ajudar a remover a graxa do vapor que emana das panelas durante o cozimento.

Luzes: Todos os exaustores possuem luzes para iluminar a área de cozinhar ou adicionar ao ambiente da cozinha.