KSET62E

Product family	Hood
Hood Type	Integrated (semi) hood
Design	Telescopic
Extraction	Extraction
Material	Painted material
EAN code	8017709233044
Hood width	60 cm
Aesthetic	Universale
Colour	Silver
Serigraphy colour	Black
Logo	Silk screen



Controls

Control setting	Buttons

Program / Functions

No. of speeds	3

Technical Features

No. of lights	2	**No. of filters**	2
Light type	LED	**Anti-grease filters**	Aluminium
Light Power	3 W	**Vent outlet**	120 mm
Light color temperature (K)	2700 K	**Minimum distance from GAS hob**	650 mm
Free outlet maximum capacity	304 m³/h	**Minimum distance from ELECTRIC hob**	500 mm
Motor power	115 W	**Non return valve**	Yes

	Extraction rate IEC 61591 [m³/h]	Noise level IEC 60704-2-13 [dBA]
Speed 1	125	46
Speed 2	160	48

Speed 3	304	62

Performance / Energy Label



Annual Efficiency Consumption (AEChood)	62 kWh/a
Energy efficicency class (EEC)	D
Fluid Dynamic Efficiency (FDE)	10.3
Fluid Dynamic Efficiency class (FDEC)	E
Lighting Efficiency (LE)	13 lux/W
Lighting Efficiency Class (LEC)	D
Grease Filtering Efficiency (GFE)	66 %
Grease Filtering Efficiency Class (GFEC)	D
Air flow at minumum speed (Qmin)	125 m³/h
Air flow at maximum speed (Qmax)	304 m³/h
Airbourne acouistical A-weighted sound Power Emission at minimum speed (SPEmin)	46 dBA
Airborne acoustical A-weighted sound Power Emission at maximum speed (SPEmax)	62 dBA
Time increase factor (F)	1.6
Measured air flow rate at best efficiency point (Qbep)	198 m³/h
Measured air pressure at best efficiency point (Pbep)	187 Pa
Measured electric power input at best efficiency point (Wbep)	99 W
Nominal Power consumption of the light system (WL)	6 W
Average illumination of the light on the cooking surface (Emiddle)	78 lux
Sound power level at highest setting (Lwa)	62 dBA

Electrical Connection

Electrical connection rating	121 W
Voltage	220-240 V
Frequency (Hz)	50-60 Hz
Power supply cable length	1500 mm
Plug	Not present

Optional accessories

Charcoal filter	KITFC62

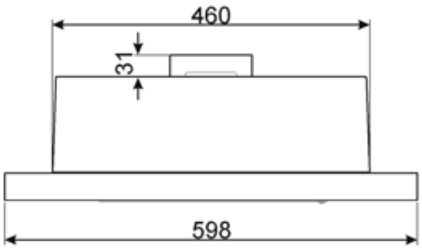
460
31
598


180
140
40
280
0-155
20,5-45

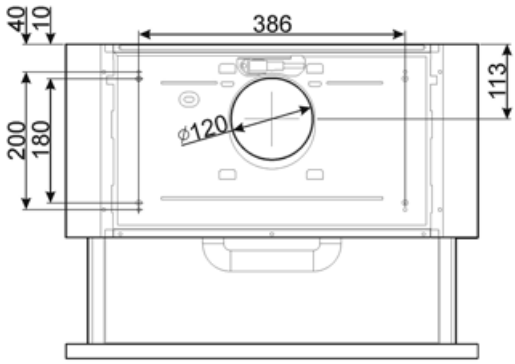
40
10
386
113
200
180
ø120

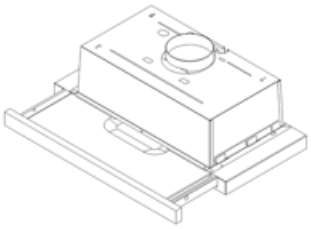

Compatible Accessories



KITFC62

Charcoal filter round (kit 2 pieces)

Symbols glossary



Filters: Model has filters to help remove grease from the steam emanating from the pans during cooking.



Lights: All cooker hoods feature lights to illuminate the cooking area or add to the ambience of the kitchen.

