KSET9MBE2

Product family	Hood
Hood Type	Integrated (semi) hood
Design	Telescopic
Extraction	Extraction
Material	Stainless steel
Type of steel	Brushed
EAN code	8017709354756
Hood width	90 cm
Aesthetic	Universale
Colour	Black
Finishing	Matt
Serigraphy colour	Silver
Logo	Silk screen



Controls

Control setting	Slider

Program / Functions

No. of speeds	3

Technical Features

No. of lights	2	**No. of filters**	2
Light type	LED	**Anti-grease filters**	Aluminium
Light Power	4 W	**Vent outlet**	120 mm
Light color temperature (K)	3000 K	**Minimum distance from GAS hob**	650 mm
Free outlet maximum capacity	520 m³/h	**Minimum distance from ELECTRIC hob**	450 mm
Motor power	230 W		

	Extraction rate IEC 61591 [m³/h]	Noise level IEC 60704-2-13 [dBA]
Speed 1	270	53
Speed 2	360	58

Speed 3	500	66

Accessories included

Tube reduction	Yes

Performance / Energy Label



Annual Efficiency Consumption (AEChood)	127 kWh/a
Energy efficicency class (EEC)	D
Fluid Dynamic Efficiency (FDE)	9,8
Fluid Dynamic Efficiency class (FDEC)	E
Lighting Efficiency (LE)	16 lux/W
Lighting Efficiency Class (LEC)	D
Grease Filtering Efficiency (GFE)	75,1 %
Grease Filtering Efficiency Class (GFEC)	C
Air flow at minumum speed (Qmin)	270 m³/h
Air flow at maximum speed (Qmax)	500 m³/h

Airbourne acouistical A-weighted sound Power Emission at minimum speed (SPEmin)	53 dBA
Airborne acoustical A-weighted sound Power Emission at maximum speed (SPEmax)	66 dBA
Time increase factor (F)	1,6
Energy Efficiency Index	94,8
Measured air flow rate at best efficiency point (Qbep)	306 m³/h
Measured air pressure at best efficiency point (Pbep)	238 Pa
Measured electric power input at best efficiency point (Wbep)	207 W
Nominal Power consumption of the light system (WL)	8 W
Average illumination of the light on the cooking surface (Emiddle)	130 lux
Sound power level at highest setting (Lwa)	66 dBA

Electrical Connection

Electrical connection rating	238 W
Voltage	220-240 V
Frequency (Hz)	50 Hz

Power supply cable length	1500 mm
Plug	Not present

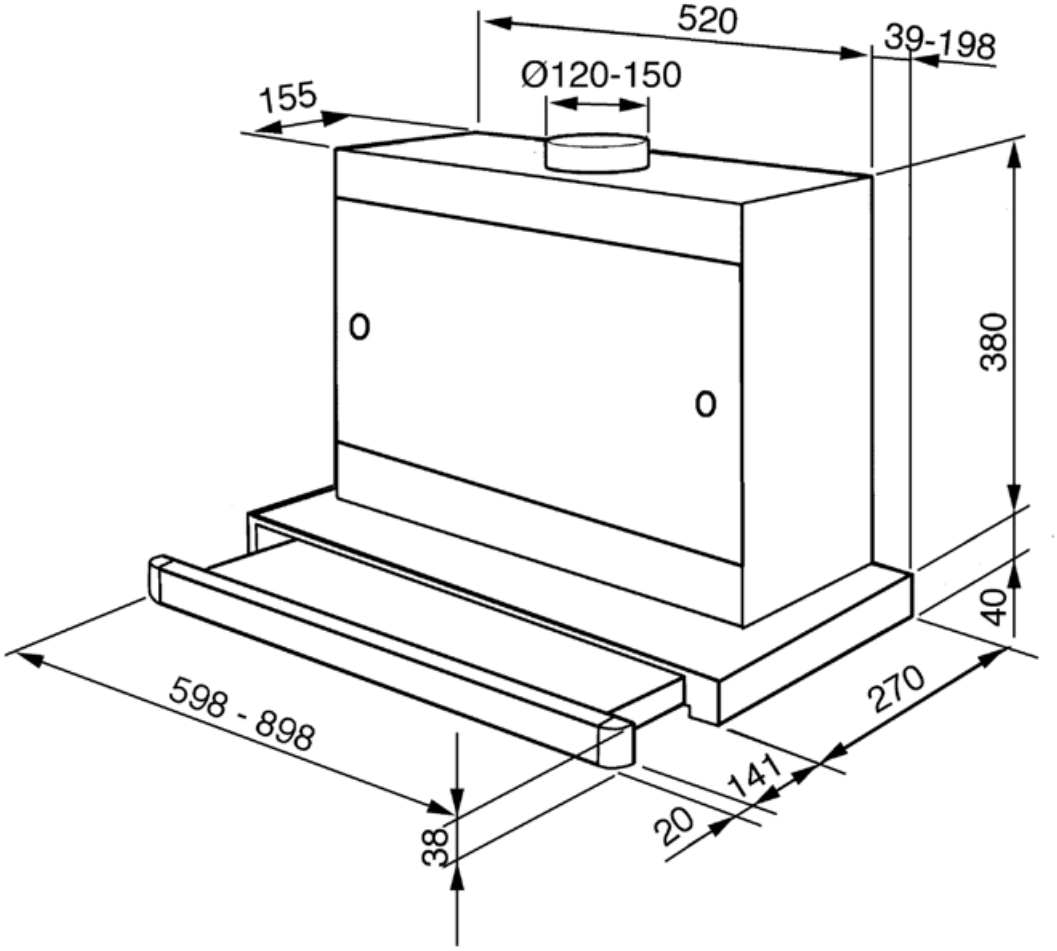
520
39-198
Ø120-150
155
380
40
270
598 - 898
141
20
38

Compatible Accessories

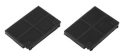

KITFC156

Charcoal filters Kit 2 pieces

Symbols glossary



Filters: Model has filters to help remove grease from the steam emanating from the pans during cooking.



Lights: All cooker hoods feature lights to illuminate the cooking area or add to the ambience of the kitchen.

