KSG52HPE



Product family	Hood
Hood Type	Integrated hood
Design	Fully integrated
Extraction	Extraction
Electronic control	Yes
Material	Painted material
Type of steel	Brushed
EAN code	8017709333614
Hood width	52 cm
Aesthetic	Universale
Colour	Stainless steel
Finishing	Satin
Serigraphy colour	Black
Logo	Silk screen

Controls

Control setting	Buttons	**Led color**	White

Program / Functions

No. of speeds	3

Technical Features

No. of lights	2	**No. of filters**	1
Light type	LED	**Anti-grease filters**	Aluminium
Light Power	5 W	**Filter replacement indicator**	Yes
Light color temperature scale (K)	3500 K	**Vent outlet**	150 mm
Free outlet maximum capacity	580 m³/h	**Minimum distance from GAS hob**	650 mm
Motor power	175 W	**Minimum distance from ELECTRIC hob**	500 mm

	Extraction rate IEC 61591 [m³/h]	Noise level IEC 60704-2-13 [dBA]
Speed 1	232	44
Speed 2	356	53

Speed 3	584	63

Accessories Included



Charcoal filters included Yes

Performance / Energy Label



Annual Efficiency Consumption (AEChood)	75 kWh/a
Energy efficicency class (EEC)	B
Fluid Dynamic Efficiency (FDE)	20.9
Fluid Dynamic Efficiency class (FDEC)	C
Lighting Efficiency (LE)	44.1 lux/W
Lighting Efficiency Class (LEC)	A
Grease Filtering Efficiency (GFE)	75.1 %
Grease Filtering Efficiency Class (GFEC)	C
Air flow at minumum speed (Qmin)	225 m³/h
Air flow at maximum speed (Qmax)	580 m³/h
Airbourne acouistical A-weighted sound Power Emission at minimum speed (SPEmin)	46 dBA
Airborne acoustical A-weighted sound Power Emission at maximum speed (SPEmax)	65 dBA
Time increase factor (F)	1.2
Energy Efficiency Index	69.6
Measured air flow rate at best efficiency point (Qbep)	345 m³/h
Measured air pressure at best efficiency point (Pbep)	355 Pa
Measured electric power input at best efficiency point (Wbep)	163 W
Nominal Power consumption of the light system (WL)	5 W
Average illumination of the light on the cooking surface (Emiddle)	221 lux
Sound power level at highest setting (Lwa)	65 dBA

Electrical Connection

Electrical connection rating	285 W
Voltage	220-240 V
Frequency (Hz)	50-60 Hz
Power supply cable length	1000 mm
Plug	Not present

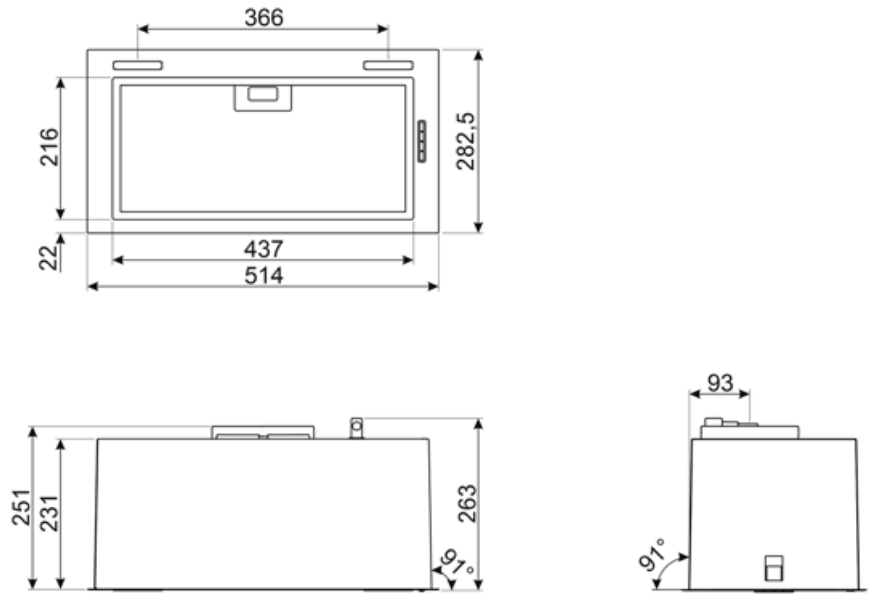
366
216
282,5
22
437
514
251
231
263
91°
93
91°

Compatible Accessories



KITFC221R

Charcoal filter high efficiency capable to regenerate and last up to 3 years.

Symbols glossary



Filters: Model has filters to help remove grease from the steam emanating from the pans during cooking.





Lights: All cooker hoods feature lights to illuminate the cooking area or add to the ambience of the kitchen.



Charcoal filters: Extracting through charcoal filters or directly to the exterior lessens strong cooking odours considerably.



Warning light(s): to advise when filters need changing.