KSGAU6P4MB

Product family	Hood
Hood Type	Integrated hood
Design	Fully integrated
Extraction	Extraction
Electronic control	Yes
Perimeter extraction	Yes
Material	Stainless steel
Type of steel	Brushed
EAN code	8017709331474
Hood width	60 cm
Aesthetic	Universale
Colour	Matte black
Finishing	Matte black
Logo	Silk screen

Controls

Control setting	Touch control back-lighted White	**Led color**	White

Program / Functions

No. of speeds	3
Intensive speed	
24h air filter function	
Time-setting options	
Auto-vent 2.0	

Technical Features



No. of lights	2	**No. of filters**	2
Light type	LED	**Anti-grease filters**	Aluminium
Light Power	2,3 W	**Filter replacement indicator**	Yes
Dimmer mode	Yes	**Vent outlet**	150 mm
Light color temperature range	2700 - 4000 K	**Minimum distance from GAS hob**	650 mm
Free outlet maximum capacity	730 m³/h	**Minimum distance from ELECTRIC hob**	650 mm
Motor power	230 W	**Non return valve**	Yes

	Extraction rate IEC 61591 [m³/h]	Noise level IEC 60704-2-13 [dBA]
Speed 1	265	49
Speed 2	360	56
Speed 3	484	61
Intensive speed	660	67

Performance / Energy Label



Annual Efficiency Consumption (AEChood)	58 kWh/a
Energy efficicency class (EEC)	B
Fluid Dynamic Efficiency (FDE)	27,9
Fluid Dynamic Efficiency class (FDEC)	B
Lighting Efficiency (LE)	39,3 lux/W
Lighting Efficiency Class (LEC)	A
Grease Filtering Efficiency (GFE)	74,9 %
Grease Filtering Efficiency Class (GFEC)	D
Air flow at minumum speed (Qmin)	265 m³/h
Air flow at maximum speed (Qmax)	484 m³/h
Air flow at boost speed (Qboost)	660 m³/h
Airbourne acouistical A-weighted sound Power Emission at minimum speed (SPEmin)	49 dBA
Airborne acoustical A-weighted sound Power Emission at maximum speed (SPEmax)	62 dBA
Airbourne acoustical A-weighted sound power emission at boost speed (SPEboost)	67 dBA
Time increase factor (F)	1,0
Energy Efficiency Index	58
Measured air flow rate at best efficiency point (Qbep)	348 m³/h
Measured air pressure at best efficiency point (Pbep)	433 Pa
Measured electric power input at best efficiency point (Wbep)	150 W
Nominal Power consumption of the light system (WL)	5 W
Average illumination of the light on the cooking surface (Emiddle)	181 lux
Sound power level at highest setting (Lwa)	62 dBA

Electrical Connection

Electrical connection rating	235 W
Voltage	220-240 V
Frequency (Hz)	50-60 Hz
Power supply cable length	1500 mm
Plug	(I) Australia

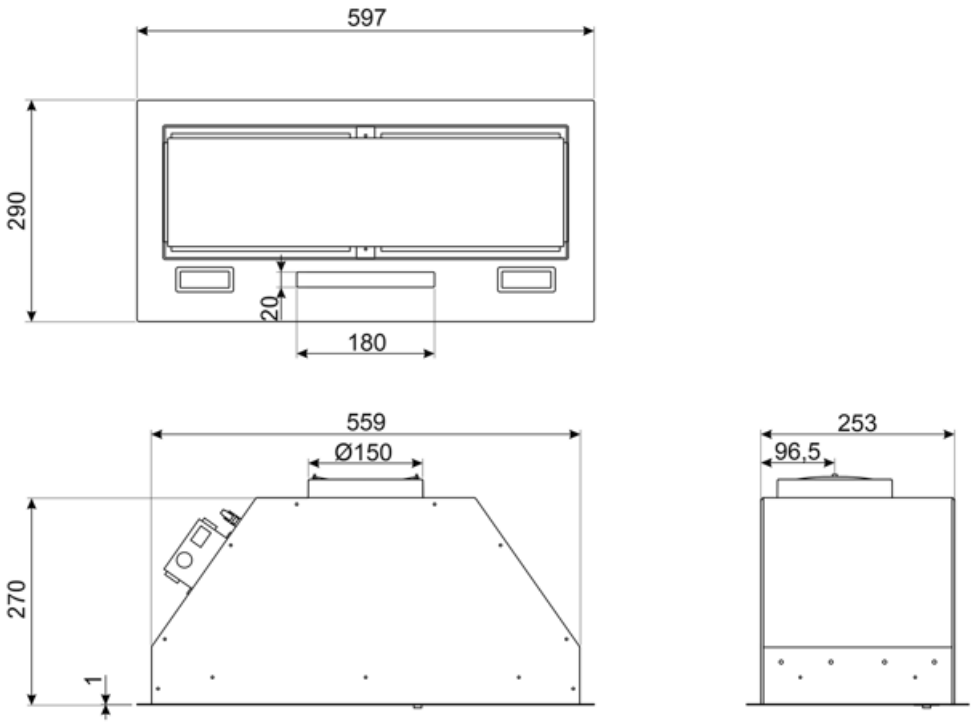
597
290
20
180
559
Ø150
270
1
253
96,5

Symbols glossary



24h: When selected this function refreshes the air for c. 10 minutes every hour over a 24 hour period, at minimum speed and an imperceptible noise level.



Switch off automatically: A special setting, to run after the end of cooking for a pre-set time and then switch off automatically.



Warning light(s): to advise when filters need changing.



Perimeter extraction panels: very efficient and aid noise reduction.



Dimmering Lights





Filters: Model has filters to help remove grease from the steam emanating from the pans during cooking.



Connection between hob and hood



Lights: All cooker hoods feature lights to illuminate the cooking area or add to the ambience of the kitchen.



Intensive/turbo setting: when extra fast extraction is required.



Tunable white from warm to cold.