KSGAU9P4X

Product family	Hood
Hood Type	Integrated hood
Design	Fully integrated
Extraction	Extraction
Electronic control	Yes
Perimeter extraction	Yes
Material	Stainless steel
Type of steel	Brushed
EAN code	8017709328399
Hood width	90 cm
Aesthetic	Universale
Colour	Stainless steel
Finishing	Satin
Logo	Silk screen

Controls

Control setting	Touch control back-lighted White	**Led color**	White

Program / Functions

No. of speeds	3
Intensive speed	
24h air filter function	
Time-setting options	
Auto-vent 2.0	

Technical Features



No. of lights	2	**No. of filters**	2
Light type	LED	**Anti-grease filters**	Aluminium
Light Power	2,3 W	**Filter replacement indicator**	Yes
Dimmer mode	Yes	**Vent outlet**	150 mm
Light color temperature range	2700 - 4000 K	**Minimum distance from GAS hob**	650 mm
Free outlet maximum capacity	730 m³/h	**Minimum distance from ELECTRIC hob**	650 mm
Motor power	230 W	**Non return valve**	Yes

	Extraction rate IEC 61591 [m³/h]	Noise level IEC 60704-2-13 [dBA]
Speed 1	243	45
Speed 2	362	53
Speed 3	481	59
Intensive speed	697	67

Performance / Energy Label



Annual Efficiency Consumption (AEChood)	53 kWh/a
Energy efficicency class (EEC)	A
Fluid Dynamic Efficiency (FDE)	30,1
Fluid Dynamic Efficiency class (FDEC)	A
Lighting Efficiency (LE)	31,1 lux/W
Lighting Efficiency Class (LEC)	A
Grease Filtering Efficiency (GFE)	77,9 %
Grease Filtering Efficiency Class (GFEC)	C
Air flow at minumum speed (Qmin)	242 m³/h
Air flow at maximum speed (Qmax)	481 m³/h
Air flow at boost speed (Qboost)	697 m³/h

Airbourne acouistical A-weighted sound Power Emission at minimum speed (SPEmin)	45 dBA
Airborne acoustical A-weighted sound Power Emission at maximum speed (SPEmax)	60 dBA
Airbourne acoustical A-weighted sound power emission at boost speed (SPEboost)	67 dBA
Time increase factor (F)	0,9
Energy Efficiency Index	52,6
Measured air flow rate at best efficiency point (Qbep)	369 m³/h
Measured air pressure at best efficiency point (Pbep)	446 Pa
Measured electric power input at best efficiency point (Wbep)	152 W
Nominal Power consumption of the light system (WL)	5 W
Average illumination of the light on the cooking surface (Emiddle)	143 lux
Sound power level at highest setting (Lwa)	60 dBA

Electrical Connection

Electrical connection rating	235 W
Voltage	220-240 V
Frequency (Hz)	50-60 Hz

Power supply cable length	1500 mm
Plug	(I) Australia

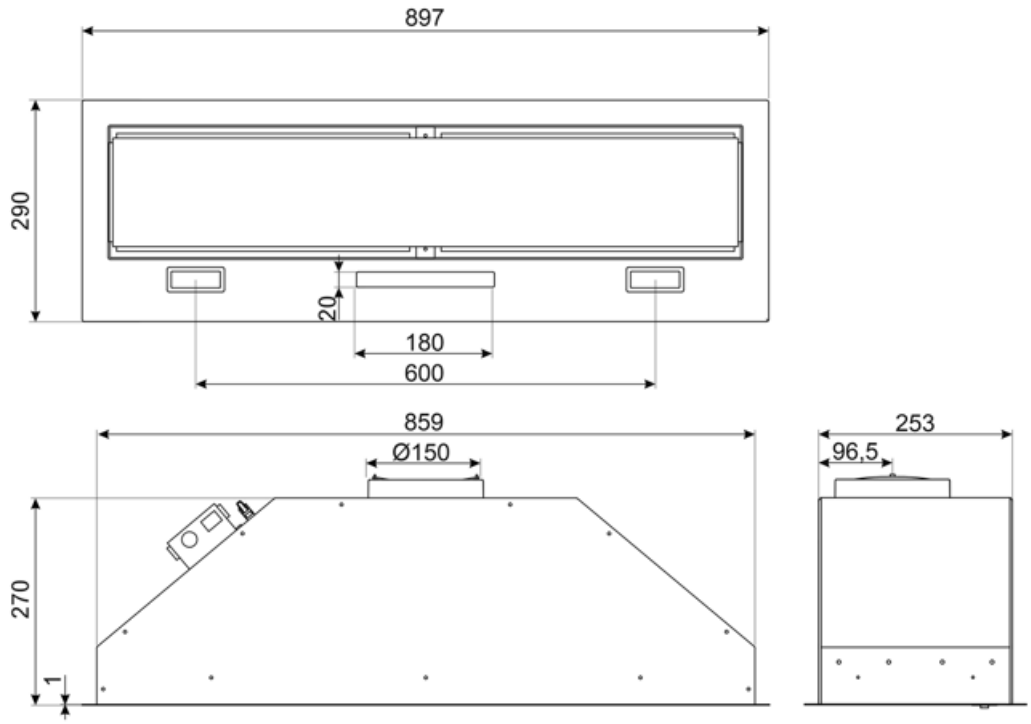
897
290
20
180
600
859
Ø150
270
1
253
96,5

Compatible Accessories

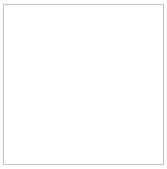

FLT6

Round Charcoal filters (kit 2 pieces)

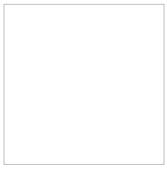

KITALLFC

Universal Charcoal filter Stainless Steel AISI 304 The filter can be washed in dishwasher 50 °C (water and suitable detergent) and to dry it put in the oven 180°C 25 minutes

Symbols glossary



24h: When selected this function refreshes the air for c. 10 minutes every hour over a 24 hour period, at minimum speed and an imperceptible noise level.



A: Product drying performance, measured from A+++ to D / G depending on the product family



Warning light(s): to advise when filters need changing.



Perimeter extraction panels: very efficient and aid noise reduction.



Connection between hob and hood



Tunable white from warm to cold.



Filters: Model has filters to help remove grease from the steam emanating from the pans during cooking.



Switch off automatically: A special setting, to run after the end of cooking for a pre-set time and then switch off automatically.



Lights: All cooker hoods feature lights to illuminate the cooking area or add to the ambience of the kitchen.



Intensive/turbo setting: when extra fast extraction is required.



Dimmering Lights