KSLS10X



Product family	Hood
Hood Type	Decorative island hood
Design	Suspended
Extraction	Recirculation
Electronic control	Yes
Perimeter extraction	Yes
Material	Aluminium
Type of steel	Brushed
EAN code	8017709351878
Hood width	100 cm
Aesthetic	Isola
Colour	Stainless Steel
Finishing	Satin
Glass Type	Black
Serigraphy colour	Grey
Logo	Silk screen

Controls

Control setting	Touch on metal	**Led color**	White

Program / Functions

No. of speeds	3
Intensive speed	BOOST
24h air filter function	24
Delay function	
Time-setting options	
Auto-vent 2.0	
H-Condense System	Yes

Technical Features

No. of lights	2	**Motor power**	39 W
Light type	LED	**No. of filters**	2
Light Power	36 W	**Anti-grease filters**	Aluminium
Dimmer mode	Yes	**Filter replacement indicator**	Yes

Light color temperature (K)	4000 K	**Minimum distance from GAS hob**	650 mm
Light color temperature range	2700 - 6500 K	**Minimum distance from ELECTRIC hob**	550 mm
Free outlet maximum capacity	650 m³/h		

	Extraction rate IEC 61591 [m³/h]	Noise level IEC 60704-2-13 [dBA]
Speed 1	120	45
Speed 2	200	58
Speed 3	420	65
Intensive speed	650	73

Accessories included

Remote control	Yes	**Charcoal filters included**	Yes regenerable

Performance / Energy Label

Nominal Power consumption of the light system (WL)	18 W	**Average illumination of the light on the cooking surface (Emiddle)**	300 lux

Electrical Connection

Battery type	Alkaline-Manganese Dioxide (Zn/MnO2)	**Frequency (Hz)**	50-60 Hz
Electrical connection rating	291 W	**Power supply cable length**	3500 mm
Voltage	220-240 V	**Plug**	Not present

Also available

Alternative colours available	Matt Black	**Available colours**	KSLS10MB

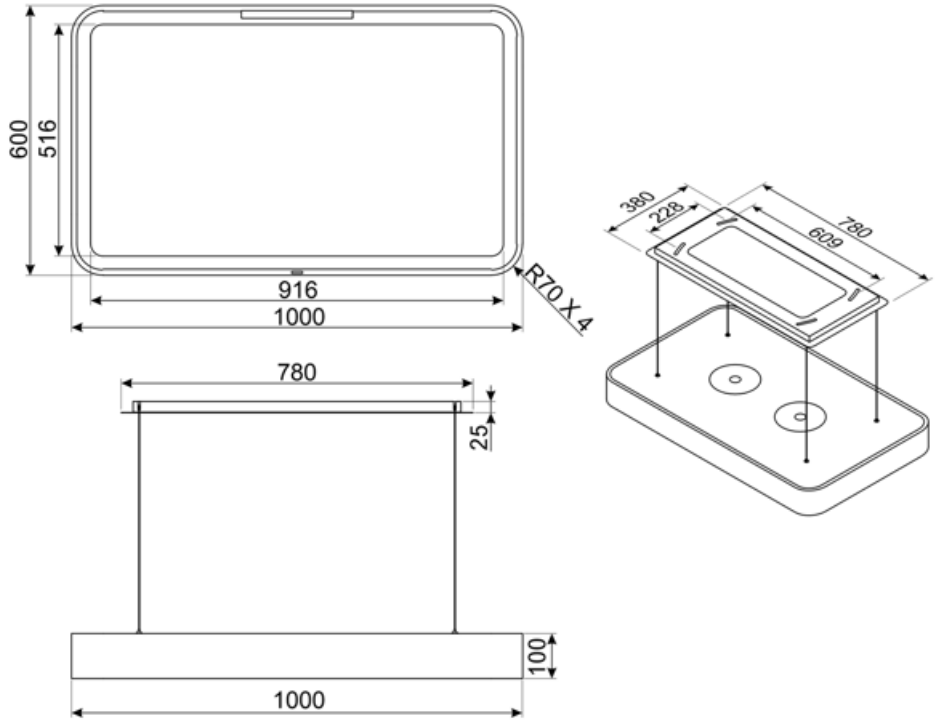
600
516
916
1000
R70 X 4
380
228
780
609
780
25
100
1000

Compatible Accessories



FLT2KSLS

Alternative products



KSLS10MB

Colour: Matt Black

Symbols glossary



24h: When selected this function refreshes the air for c. 10 minutes every hour over a 24 hour period, at minimum speed and an imperceptible noise level.



Connection between hob and hood



Delay timer: can be set to run the programme at a convenient time or to take advantage of off-peak energy periods.



Warning light(s): to advise when filters need changing.



Perimeter extraction panels: very efficient and aid noise reduction.



Filters: Model has filters to help remove grease from the steam emanating from the pans during cooking.



Switch off automatically: A special setting, to run after the end of cooking for a pre-set time and then switch off automatically.



Dimmering Lights



Lights: All cooker hoods feature lights to illuminate the cooking area or add to the ambience of the kitchen.



Intensive/turbo setting: when extra fast extraction is required.