KT90PE

Product family	Hood
Hood Type	Chimney Cooker Hoods
Design	Chimney
Extraction	Ducted out or re-circulation possible
Material	Painted material
Type of steel	Brushed
EAN code	8017709211677
Hood width	90 cm
Aesthetics	Victoria
Colour	Cream
Finishing	Gloss
Logo	Applied



Controls

Control setting	Control knobs	**Control knobs**	Victoria
No. of controls	2	**Controls colour**	Steel effect

Program / Functions

No. of speeds	3
Intensive speed	BOOST

Technical Features

No. of lights	2	**No. of filters**	3
Light type	LED	**Anti-grease filters**	Aluminium
Light power	1 W	**Vent outlet**	150 mm
Light colour temperature scale (K)	3000 K	**Minimum distance from GAS hob**	750 mm
Free outlet maximum capacity	820 m³/h	**Minimum distance from ELECTRIC hob**	650 mm
Motor power	275 W	**Non return valve**	Yes

	Extraction rate IEC 61591 [m³/h]	Noise level IEC 60704-2-13 [dBA]
Speed 1	334	49
Speed 2	439	57

Speed 3	567	61
Intensive speed	788	69

Performance / Energy Label



Annual Efficiency Consumption (AEChood)	59 kWh/year
Energy efficiency class (EEC)	A
Fluid Dynamic Efficiency (FDE)	30
Fluid Dynamic Efficiency class (FDEC)	A
Lighting Efficiency (LE)	102,3 lux/W
Lighting Efficiency Class (LEC)	A
Grease Filtering Efficiency (GFE)	76,6 %
Grease Filtering Efficiency Class (GFEC)	C
Air flow at minumum speed (Qmin)	334 m³/h
Maximum extraction rate	567 m³/h
Intensive extraction rate	788 m³/h

Airbourne acouistical A-weighted sound Power Emission at minimum speed (SPEmin)	49 dBA
Airborne acoustical A-weighted sound Power Emission at maximum speed (SPEmax)	61 dBA
Airbourne acoustical A-weighted sound power emission at boost speed (SPEboost)	69 dBA
Time increase factor (F)	1,00
Energy Efficiency Index per first cavity	52,4
Measured air flow rate at best efficiency point (Qbep)	438 m³/h
Measured air pressure at best efficiency point (Qbep)	434 Pa
Measured electric power input at best efficiency point (Wbep)	176 W
Normal Power of the light system (Wl)	2 W
Average illumination of the light on the cooking surface (Emiddle)	225 lux
Sound power level at highest setting (Lwa)	61 dBA

Electrical Connection

Nominal power	278 W
Voltage	220-240 V
Frequency (Hz)	50-60 Hz
Power supply cable length	1000 mm
Plug	No

Also available

Alternative colours availible	White, Black, Stainless steel
Available colours	KT90BE - KT90BLE - KTR90XE

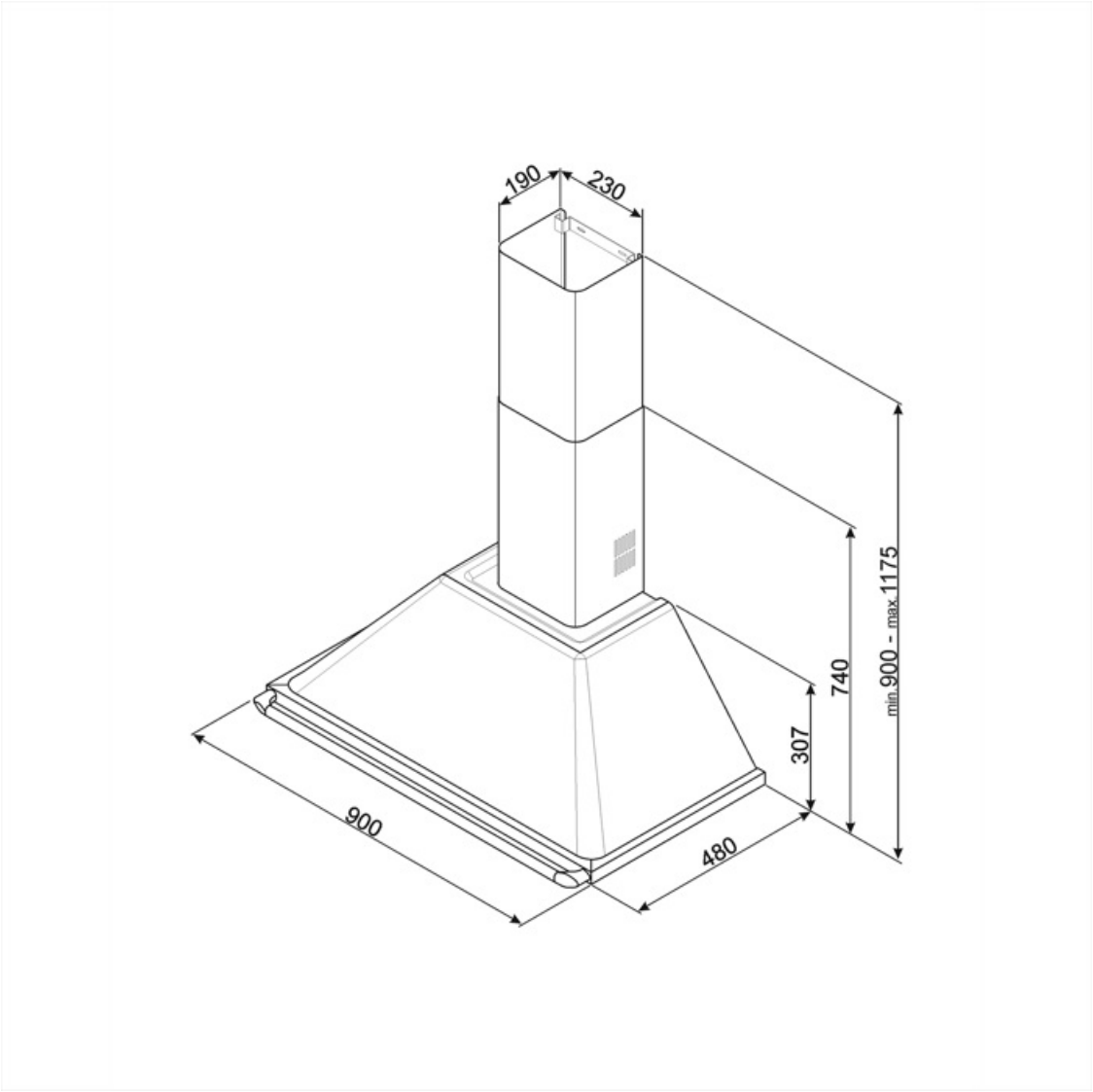
190
230
min.900 - max.1175
740
307
900
480

Compatible Accessories



FLT6

Round Charcoal filters (kit 2 pieces)



KITCMNKPU

Chimney extension dimension 227.5 * 190 * 800 Cream Victoria hood 90 cm



KITALLFC

Universal Charcoal filter Stainless Steel AISI 304 The filter can be washed in dishwasher 50 °C (water and suitable detergent) and to dry it put in the oven 180°C 25 minutes

Symbols glossary



Filters: Model has filters to help remove grease from the steam emanating from the pans during cooking.



A: Product drying performance, measured from A+++ to D / G depending on the product family



Lights: All cooker hoods feature lights to illuminate the cooking area or add to the ambience of the kitchen.



Intensive/turbo setting: when extra fast extraction is required.