LBI147

EAN Code	8017709302818
Product Family	Washing Machine
Commercial width	60 cm
Installation	Fully integrated built-in
Load type	Frontal



Aesthetics

Colour	White
Front panel colour	White
Led/display colour	Green
Front panel type	Smeg ST 2010
Function buttons colour	White
On/Off buttons colour	White
No. of control knobs	1

Programme/temperature knob colour	White
Door colour	White
Door window	Standard
Handle colour	White
Drawer Color	White
Cabinet colour	White
Top colour	White

Programs

Controls	Electronic
Programmes graphics	Symbols
No. of programmes	15

Programmes

Shirts	Cotton	Delicates
Eco 40-60	Jeans	Wool
Hand Wash	Mix	Night
Duvet	Quick Wash	Rinse + Spin
Drain + Spin	Synthetics	Sport

Washing Temperature

Cool	20°C	30°C
40°C	60°C	90°C

Special programmes

Shirts	Jeans	Night
Quick 15 min	Sport	

Display

Residual time indicator	delay start	programme status indication
spin regulation	temperature regulation	

Display type LED DISPLAY

Buttons/Options

Delay timer	FlexiTime	Prewash
Additional rinse	Anti-wrinkle (easy ironing)	Quick
Intensive		

On/off indicator (light)	Yes
Programme progress indicator (light)	On display
End of cycle indicator (light)	On display

Technical Features

Durability index	6.5	**Door diameter**	30 cm

Type of motor	Standard
Electronic control functioning	Yes
Programme selection knob	Yes
Programme/temperature selection knob	Yes
Spin speed selection on display/LED	No spin/ 600/ 800/ 1000/ 1200/ 1400
Polypropilene tank	Yes
Basket	Stainless steel
Drum capacity	52 l
Liquid detergent accessory as standard	Yes

Door opening	110°
Automatic variable load	Yes
Antifoam system	Yes
Load balancing system	Automatic
Easy to access filter	Yes
Child lock (functions block)	Control block
Anti-flood system	Yes
Aquastop system	Total
Furniture door can be fitted on right or left side with adjustable hinges	Yes

Performance / Energy Label - Reg. 2019

Supplier's name or trademark	SMEG
Rated Capacity	7 kg
Energy Efficiency Class	E
Energy_cons_100	77 kWh
Water Consumption	44 litres

Spin-drying efficiency class	B
Airbone acoustical noise class	A
Airbone acoustical noise	72 dB(A) re 1 pW
Programme duration at rated capacity	2:50 h:min

Electrical Connection

Nominal power	2200 W
Current	10 A
Voltage (V)	220-240 V

Frequency (Hz)	50 Hz
Power supply cable length	225 cm
Plug	(F;E) Schuko

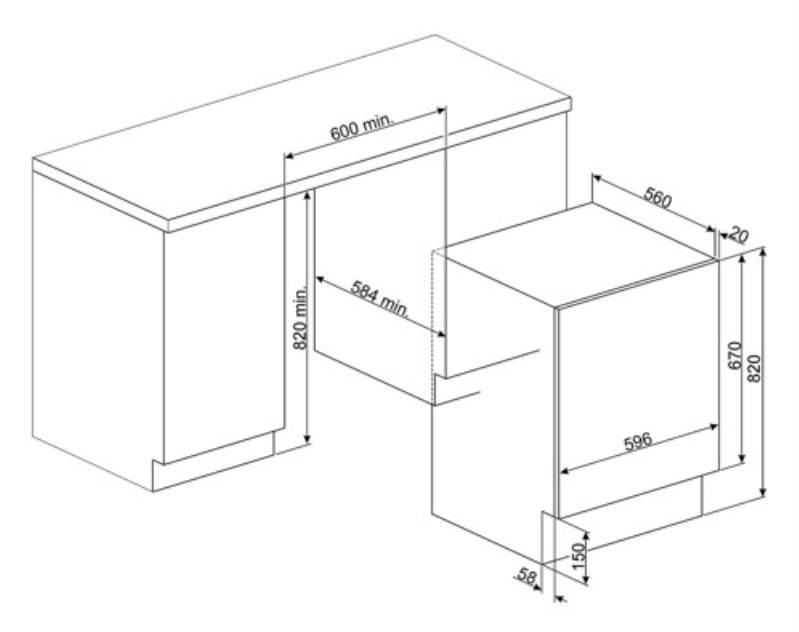

Compatible Accessories



KITPLV2

Kit extension for dishwasher and washing machine: lenght mt. 2



KITWDHE1

5 cm raising kit for built-in washing machines and washer dryers

Symbols glossary



Total acquastop: Most models of Smeg dishwashers are equipped with Acquastop Totale, which allows to avoid flooding as a result of water leakage. The system consists of a a float sensor, disposed under the inner chamber of a dishwasher, which blocks water supply inside the appliance in case of water leakage into the lower tray. An additional electromagnetic valve on the water inlet hose also automatically blocks water supply if detecting water leakage in the hose. For Laundry: Total acquastop, the product is built with 3 levels of anti-flood devices to ensure protection against water leakage.



A++: Energy efficiency class A++ helps to save up to 20% energy compared to class A. Maximum performance with minimum consumption is guaranteed.



Automatic Load Balancing: provides an ideal distribution of laundry in the drum. In case if the imbalance is detected, the rotation speed starts being controlled in such way to evenly redistribute laundry in the drum, and thus reduce vibration.



Delay timer: can be set to run the programme at a convenient time or to take advantage of off-peak energy periods.



30 cm: Large loading hatch of 30-32-33 cm in diameter, makes laundry loading and unloading easier and faster with maximum ease of use.



FlexiTime: The FlexiTime option allows the user to reduce the time of the cycle selected, providing extra flexibility and control.



Prewash: program designed for heavily soiled garments.



Eco 40-60: reference programme defined by EU regulations for measuring the energy performance of washing machines. Ideal for normally soiled cotton garments washable at 40 °C or 60 °C, it provides an excellent balance between cleaning performance and savings, although it requires a longer washing time.



Easy Iron: this is an option which can be selected to ensure the finished laundry is left with less creases to make ironing easier.



Variable load: In all models of washing machines is present the system of variable load, according to which the machine automatically diversifies the wash cycle and the time of operation depending on the quantity and type of laundry introduced, allowing a significant saving of water and energy power, up to 30% compared to the versions with fixed load.



Child lock: some models are fitted with a device to lock the programme/cycle so it cannot be accidentally changed.



LED display: to show programmes, functions and options selected and the time to the end of the cycle.



This option advises when the periodic cleaning of the filters is needed, in order to avoid forgetfulness and thus guarantee the perfect functioning of the dryer over time. The convenient position of the filters makes maintenance fast and extremely simple.



Intensive option: this function extends the duration of the wash cycle and increases the intensity of the wash, ensuring a deeper cleaning for heavily soiled garments.



Cotton: programme designed for washing medium to heavily soiled cotton garments, ensuring thorough and effective cleaning.



Delicate: Clothing such as underwear, hosiery and luxury fabrics should be dried on the delicate cycle to help extend the life of the clothing.



To drain the water in the machine.



Hand wash: this specific programme for delicate fabrics uses slower rotations of the drum to ensure the utmost care for clothing.



Mixed fabrics: this cycle is designed for lightly soiled laundry in a mix of cottons and synthetics, or can be used just to refresh stored items.



Quick 15 min.: ideal for small loads of lightly soiled garments, it guarantees a fast wash in a very short time.



Rinse and Spin: this programme is suitable for rinsing and spinning garments.



Sport: programme designed to quickly wash sports and technical clothing, which undergo frequent washes, ensuring optimal hygiene and protection of the fibres.



Wool: this programme for wool or delicate fabrics uses slower rotations of the drum to ensure the utmost care for clothing.



Drum has maximum capacity of 7kg of dry laundry.





Extra Rinse: Extra Rinse: adds an extra rinse cycle to that already provided in the program chosen, to remove any residual detergent. This function is particularly suitable for those with allergies or skin problems.



Jeans: a washing cycle which is kind to the colour and fabric of denim whilst minimising wrinkles.



Night: an ideal programme for those who want to take advantage of off-peak energy periods, this cycle is particularly quiet due to slower rotations of the drum.



Super fast: a programme designed to wash small amounts of laundry fast, ideal for washing lightly soiled garments.



Shirts: Specific program that allows you to wash shirts with the utmost attention. The addition of steam at the end of the cycle ensures a reduction in the formation of creases and ironing times.



Synthetics: programme designed for synthetic and mixed-fibre fabrics. Ideal for lightly to normally soiled garments, it uses moderate temperatures and a gentler washing action to protect the fibres and reduce creasing, ensuring effective cleaning without stressing the materials.



Option that allow to reduce times of the selected program.



Energy efficiency class E

Benefit (TT)

15 programmes

Up to 15 programmes to meet every daily need

LED Display

With soft touch control and LED lights for intuitive and fast setting and selection of each option