LDR861-2

Sink material	Stainless steel
Type	Welded sink
No. of bowls	1
Drainer	Reversible
EAN code	8017709304614



Aesthetics

Aesthetic	Universale	**Building in type**	Ultra-low profile
Colour	Stainless Steel	**Logo**	Embossed
Finishing	Scotch Brite	**Tap hole / precut tap hole**	2 Tapholes
Series	Mira		

	Bowl type LH	Bowl thickness LH (mm)	Bowl dimensions LH, WxDxA (mm)	LH Bowl depth (mm)	Radius corner left bowl	Overflow LH bowl	Strainer position LH bowl	Strainer dimension LH bowl
LH Bowl	Minimum radius	1	340 x 400 x 200	200	15	Yes, flush fitted	Side bowl	3.5"

Technical Features

Frame thickness	0.7 mm	**Tap hole diameter**	35 mm
Frame depth (mm)	14	**Popup command**	Yes, single
Dimensions of the product (mm)	214x860x500 mm	**Popup command type**	Round
		Drainer inclination	2 °
Cutout dimension topmount (mm)	840 x 480 mm	**Gasket type**	Sealing paste
		No. of clips	8
Undermount cutout radius	5 mm	**Type of clips**	Standard
Height from kitchen top	6 mm		
Base unit size	60 cm		
Tap hole	2		

Accessories included

Accessories for installation	Strainer, Savespace siphon with dishwasher outlet connection, Fixing clips, Gasket, Automatic pop - up with roudn rotary control

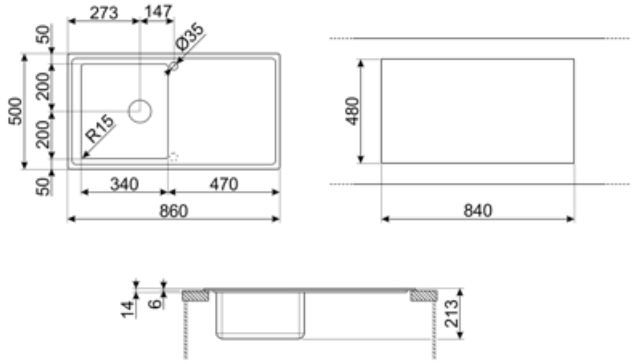

Compatible Accessories



3713

Siphon double bowls sinks (dishwasher connection included)



DB34

St/steel drain basket to fit STD radius 340 x 400 bowl, 180 mm depth



KITFD050

Waste disposal 0,5 HP, Motor: 1/2 horsepower, Fits all sinks with 3 1/2" waste outlet



KITFD075

Waste disposal 0,75 HP, Motor: 1/2 horsepower, Fits all sinks with 3 1/2" waste outlet



KITFD100

Waste disposal 1 HP, Motor: 1/2 horsepower, Fits all sinks with 3 1/2" waste outlet



KITSLTRND1

Bowl automatic pop up Rondò waste kit with rectangular overflow and round knob



STABMIX

Tap stabiliser

Symbols glossary



Cupboard width required for sink installation.



Sink depth - depending on the model, the depth can be from13 to 24,5.



Ultra-low profile: Installation of product with flat edge - height of 1 mm.



Thanks to the double tap hole, most of our sinks are easily reversible, giving you the flexibility to make any type of kitchen composition.