LPR862

Sink material	Stainless steel
Type	Welded sink
No. of bowls	2
EAN code	8017709304713



Aesthetics

Aesthetic	Universale	**Building in type**	Ultra-low profile
Colour	Stainless Steel	**Logo**	Embossed
Finishing	Brushed	**Tap hole / precut tap hole**	2 Tapholes
Series	Aurora		

	Bowl type RH	Bowl thickness (mm)	Bowl dimensions, WxDxH (mm)	Bowl depth (mm)	Radius corner right bowl (mm)	Overflow	Strainer position	Strainer dimension
RH Bowl	Traditional	0.6	340 x 400 x 180	180	80	Yes, traditional	Side bowl	3.5"
LH Bowl	Traditional	0.6	340 x 400 x 180	180	80		Side bowl	3.5"

Technical Features

Frame thickness	0.6 mm	**Tap hole**	2
Frame depth (mm)	13	**Tap hole diameter**	35 mm
Dimensions of the product (mm)	193x860x500 mm	**Dividing wall width**	30 mm
Cutout dimension topmount (mm)	840 x 480 mm	**Gasket type**	Sealing paste
		No. of clips	8
		Type of clips	Standard
Height from kitchen top	6 mm		
Base unit size	90 cm		

Accessories included

Accessories for installation	Strainer, Savespace siphon with dishwasher outlet connection, Fixing clips, Gasket, Blanking cap

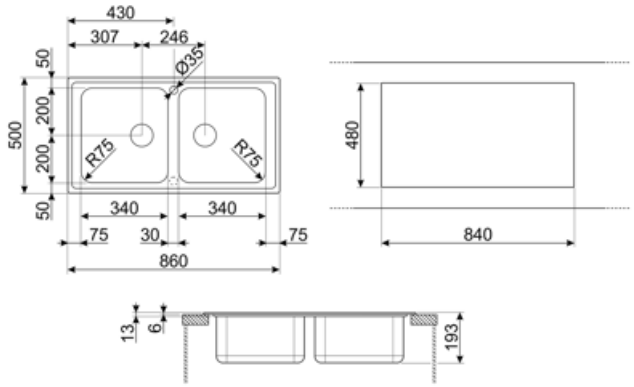

Compatible Accessories



3713

Siphon double bowls sinks (dishwasher connection included)



DB34

St/steel drain basket to fit STD radius 340 x 400 bowl, 180 mm depth



KITDS

Soap dispenser chrome finishing with round knob



KITDSQ

Soap dispenser chrome finishing with square knob 40x40 mm



KITFD050

Waste disposal 0,5 HP, Motor: 1/2 horsepower, Fits all sinks with 3 1/2" waste outlet



KITFD075

Waste disposal 0,75 HP, Motor: 1/2 horsepower, Fits all sinks with 3 1/2" waste outlet



KITFD100

Waste disposal 1 HP, Motor: 1/2 horsepower, Fits all sinks with 3 1/2" waste outlet



STABMIX

Tap stabiliser

Symbols glossary



Cupboard width required for sink installation.



Sink depth - depending on the model, the depth can be from13 to 24,5.



Ultra-low profile: Installation of product with flat edge - height of 1 mm.