LRX902

Sink material	Stainless steel
Type	Welded sink
No. of bowls	2
EAN code	8017709208936



Aesthetics

Aesthetic	Linea	**Building in type**	Standard
Colour	Stainless Steel	**Logo**	Embossed
Finishing	Brushed	**Tap hole / precut tap hole**	1 Tap hole

	Bowl type RH	Bowl thickness (mm)	Bowl dimensions, WxDxH (mm)	Bowl depth (mm)	Radius corner right bowl (mm)	Overflow	Strainer position	Strainer dimension
RH Bowl	Minimum radius	1	400 x 340 x 200	200	15	Yes, flush fitted	Side bowl	3.5" Steel cover
LH Bowl	Minimum radius	1	400 x 340 x 200	200	15		Side bowl	3.5" Steel cover

Technical Features

Frame thickness	0,7 mm	**Tap hole**	1
Frame depth (mm)	9	**Tap hole diameter**	35 mm
Dimensions of the product (mm)	219x897x510 mm	**Dividing wall width**	29 mm
Cutout dimension topmount (mm)	860 x 480 mm	**Gasket type**	Sealing paste
		No. of clips	12
		Type of clips	Standard
Undermount cutout radius	10 mm		

Height from kitchen top	10 mm
Base unit size	90 cm

Accessories included

Accessories for installation	Strainer, Savespace siphon with dishwasher outlet connection, Fixing clips, Gasket	**Rondò Cover waste kit**	Yes

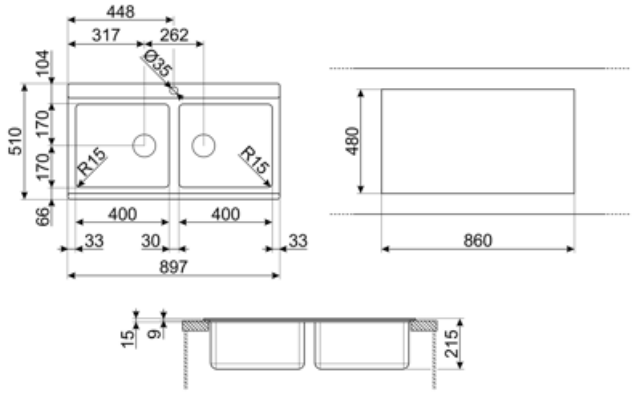

Compatible Accessories



3713

Siphon double bowls sinks (dishwasher connection included)



DB34

St/steel drain basket to fit STD radius 340 x 400 bowl, 180 mm depth



KITFD075

Waste disposal 0,75 HP, Motor: 1/2 horsepower, Fits all sinks with 3 1/2" waste outlet



RND2V

2 Bowls standard Rondò waste kit with rectangular overflow



CVB40N2

LINEA black sliding glass and st/steel chopping board 450 x 400 mm (2 pcs each kit)



KITFD050

Waste disposal 0,5 HP, Motor: 1/2 horsepower, Fits all sinks with 3 1/2" waste outlet



KITFD100

Waste disposal 1 HP, Motor: 1/2 horsepower, Fits all sinks with 3 1/2" waste outlet



STABMIX

Tap stabiliser

Symbols glossary



Cupboard width required for sink installation.



Sink depth - depending on the model, the depth can be from13 to 24,5.



Standard installation: Traditional installation in tabletop, suitable for any kitchen sets.