LSPU8643BL

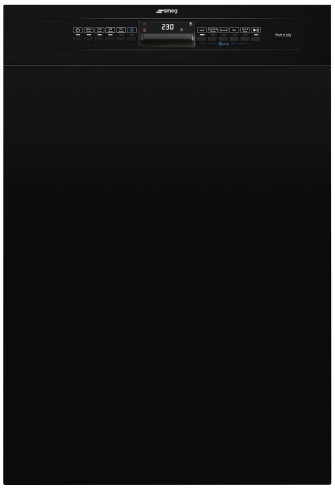

Product Family	Dishwashers
Commercial width	60 cm
Commercial height	86 cm
Installation	Under counter built-in
N° baskets	3, FlexiDuo
EAN code	8017709303723

Programs

N. of programmes	10+1	**Delicate**	Yes
Washing temperatures	38, 45, 50, 55, 65, 70, 75 °F	**Normal**	Yes
Soak	Yes	**Crystal & China**	Yes
Express 27'	Yes	**Eco express**	Yes
Mix	Yes	**Express 60'**	Yes
Self clean	Yes	**Pots & Pans**	Yes
Sterilise	Yes		

Options

Dry Assist option	Yes	**1/2 load FlexiZone option**	Yes
Delay timer option	Up to 24 hours	**Special programs option**	Yes

Baskets

Basket components colour	Grey	**Lower Basket**	With 2 foldable racks
Upper Basket	With 1 foldable rack	**Lower basket with anti-drip inserts**	Yes
Glass holder	Yes	**Largest loadable dish in lower basket**	35,0 inches
Height adjustment of the upper basket	On three levels (5 cm)		

Sliding Guides Extra Glide	Yes	**Colour Inner Components**	Blue
Largest loadable dish in upper basket	18,0 inches	**Cutlery basket**	Yes

Technical Features



Width (mm)	23 9/16 "	**Flood protection system**	Total Acquastop
Depth (mm)	22 7/16 "	**Max water hardness**	100°fH;58°dH
Display type	LED (external)	**Drying system**	Natural condenser drying, with Dry Assist automatic door opening system at the end of the cycle
Product Height (mm)	32 3/16 "		
Display	Delayed start, Programme time indicator, Time to end indication	**Tub material**	Stainless steel
		Filter	Stainless steel
Programme graphics	Symbols	**Concealed heating element**	Yes
On/off indicator	Yes		
Salt light indicator	Light	**Hinges**	Self balancing with variable hinges
Rinse aid indicator	Light		
Progress indicator	Yes	**Min. and max plinth height**	98 - 168 mm
End of cycle indicator	On display, with acoustic signal	**Adjustable feet**	7cm, from 860 to 930 mm
		Additional gaskets	Yes
Auto switch-off	Yes	**Back cover**	Yes
Washing system	Orbital	**Depth of dishwasher with open door (mm)**	1146 mm
Third spray arm	Single		
Water softener	With electronic setting	**Top cover**	Metallic sheet
		Energy Star	Yes

Electrical Connection

Connected power	1800 W	**Type of connection**	Single-phase
Current	10 A	**Power supply cable length**	140 "
Voltage	110-120 V		
Frequency (Hz)	60 Hz	**Plug**	(A) USA e Messico

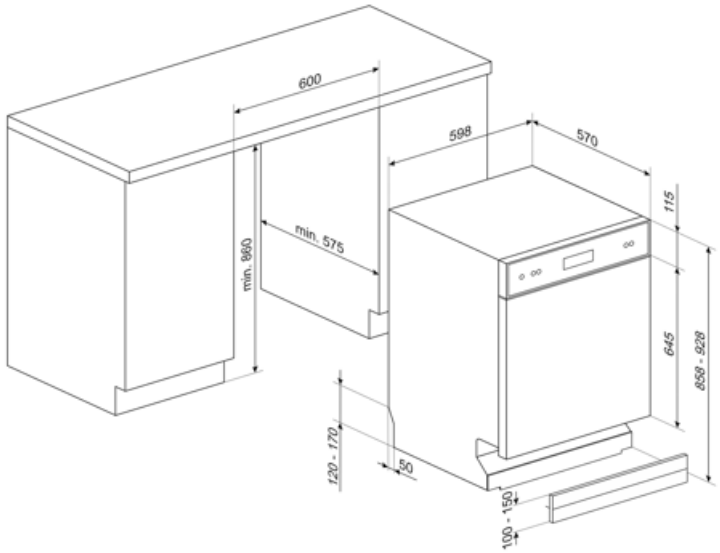
600
598
570
115
min. 575
min. 960
645
858 - 928
120 - 170
50
100 - 150

Compatible Accessories

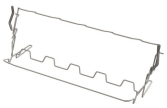

KITGH

Kit glass holder. It has to be fitted on the first basket but only if there are foldable racks



KITPL60N

Toekick Kit in Black colour with adjustable height and deepness. Can be installed over all the fully integrated and underbench models with variable fulcrum or flexifit hinges.



KITPLV2

Kit extension for dishwasher and washing machine: lenght mt. 2



KITPL60B

Toekick Kit in White colour with adjustable height and deepness. Can be installed over all the fully integrated and underbench models with variable fulcrum or flexifit hinges.



KITPL60X

Toekick Kit in Stainless Steel with adjustable height and deepness. Can be fitted over all the fully integrated and underbench models with variable fulcrum or flexifit hinges.

Symbols glossary



To improve the drying of dishes without leaving stains.



Delay Timer: Option to postpone the start of the desired programme by up to 24 hours in order to programme the dishwasher to run at the desired time.



The Dry Assist option ensures optimal drying of the dishes by automatically opening the door at the end of the wash cycle. Reducing the rinse temperat



FlexiZone: The ½ load flexizone allows you to wash a reduced load saving energy, water and time and there are no restrictions on where the items are placed.



Noise Level: Excellent insulation and special devices keep noise to a minimum.



Delicate: Delicate washing program is designed for delicate dishes which are not heavily soiled.



Soak programme: The soak programme provides a rinse to prevent dirt from drying.



13 place settings: Number of place settings.



Dishwasher cleaning cycle. The cycle should be started with the machine empty, without dishes. It is recommended to run the program every 2-3 months, using special dishwasher detergents.



STERYL 75°: Intensive wash cycle ideal for plates, pots, pans, cutting boards, feeding bottles.



86 cm high



LED display: to show programmes, functions and options selected and the time to the end of the cycle.



FlexiDuo: The FlexiDuo 3rd cutlery basket allows you to arrange cutlery or small cups, ladles, or bulky utensils however you like: it consists of two separate and moveable modules.



The ExtraGlide guides system makes the second basket run even smoother and softer. It facilitates movement even when fully loaded, and thanks to the increased excursion, facilitates the insertion of dishes into the basket.



Orbital wash system distributes water evenly throughout the 60cm dishwasher cavity, directing water with precision to ensure an excellent wash.



Mix: The Mix programme is suitable for mixed crockery and everyday pots and pans, without any particular incrustation.



Express 27': The Express 27' programme is a quick wash cycle, at low temperatures, for lightly soiled dishes.



Total Acquastop: In addition to the partial Acquastop protection present in all Smeg dishwashers, some models have an electronic device fitted to the water intake hose, which monitors water levels in the machine, detects leaks in the hose and switches off the water supply immediately when necessary.



Allows you to enable additional programs when selected together with any wash cycle.