LSTA147SSA



EAN Code	8017709265281
Product Family	Washer-Dryer
Commercial width	60 cm
Commercial depth	Large capacity
Installation	Built-in
Load type	Frontal

Programs

Controls	Electronic
Programmes graphics	Written in EN
Multilanguage clip system	
Languages clip	
No. of programmes	15

Programmes

Cotton	Cotton ECO	Clean
Delicate drying	Delicates	Drain + Spin
Mix	Night	Normal drying
Quick Wash	Rinse + Spin	Shirts
Sport	Synthetics	Wool

Washing Temperature

Cool	30°C	40°C
60°C	75°C	90°C

Special programmes

Shirts	Mix	Night
Quick 15 min	Sport	

Special Clean programme, to remove residual fluff Yes
Woolmark Code
Display

Residual time indicator	delay start	Recommended load indicator
programme status indication	spin regulation	temperature regulation

Display type LED DISPLAY

Buttons/Options

Delay timer	FlexiTime	Prewash
Additional rinse	No spin	Anti-wrinkle (easy ironing)
Intensive	Cold wash	Drying

Programme progress indicator (light) On display
End of cycle indicator (light) On display

Technical Features

Effective consumption	
Type of motor	Standard
Electronic control functioning	Yes
Programme selection knob	Yes
Spin speed selection on display/LED	No spin/ 600/ 800/ 1000/ 1200/ 1400
Display/led for temperature regulation	Yes
Polypropilene tank	Yes
Basket	Stainless steel
Drum capacity	52 l
Liquid detergent accessory as standard	Yes
Door diameter	30 cm
Door opening	110°

Automatic variable load	Yes
Antifoam system	Yes
Load balancing system	Automatic
Easy to access filter	Yes
Child lock (functions block)	Control block
Anti-flood system	Yes
Autocleaning system	Yes
Aquastop system	Total
Humidity sensor	Yes
Water supply	Single, cold
Accessories included	
Furniture door can be fitted on right or left side with adjustable hinges	Yes

Performance / Energy Label

Washing loading capacity	7 kg
Drying loading capacity	4 kg
Max spin speed	1400 giri/min
Energy efficiency class	B
Washing efficiency class	A
Energy rating	BA
Noise level washing	56 dB(A) re 1 pW
Noise level spinning	72 dB(A) re 1 pW
Noise level drying	58 dB(A) re 1 pW
Energy consumption - Cotton 60° - Wash only	1,3 kWh
Energy consumption (washing + drying)	5,6 kWh
Water consumption (washing) per cycle	49 l
Water consumption (washing+drying) per cycle	89 l
Duration of the normative programme	420 min
Energy annual consumption (washing)	260 kWh
Energy annual consumption (washing+drying)	1120 kWh
Water annual consumption (washing)	9800 l
Water annual consumption (washing+drying)	17800 l
Residual humidity percentage (%)	50 %

Performance / Energy Label - Reg. 2019

Supplier's name or trademark	SMEG

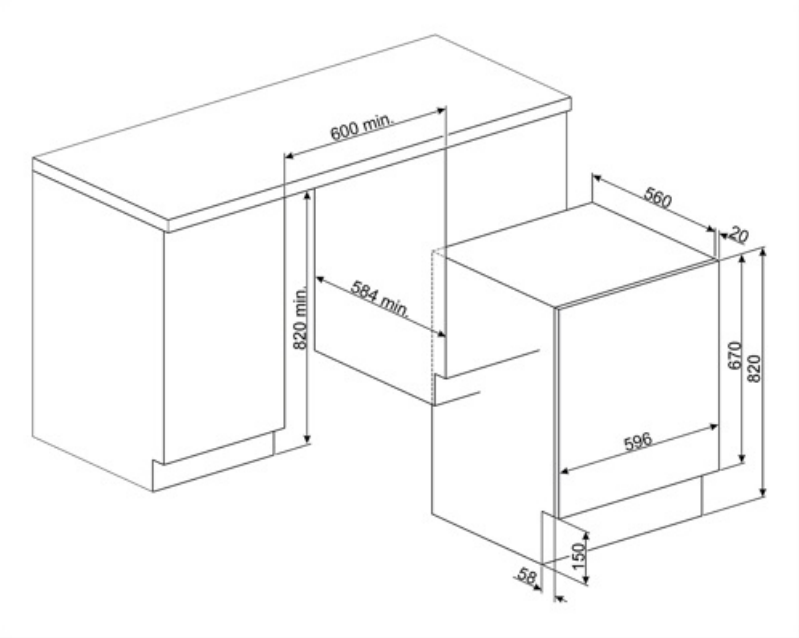

Symbols glossary



Total acquastop: Most models of Smeg dishwashers are equipped with Acquastop Totale, which allows to avoid flooding as a result of water leakage. The system consists of a a float sensor, disposed under the inner chamber of a dishwasher, which blocks water supply inside the appliance in case of water leakage into the lower tray. An additional electromagnetic valve on the water inlet hose also automatically blocks water supply if detecting water leakage in the hose. For Laundry: Total acquastop, the product is built with 3 levels of anti-flood devices to ensure protection against water leakage.



Variable load: In all models of washing machines is present the system of variable load, according to which the machine automatically diversifies the wash cycle and the time of operation depending on the quantity and type of laundry introduced, allowing a significant saving of water and energy power, up to 30% compared to the versions with fixed load.



Automatic Load Balancing: provides an ideal distribution of laundry in the drum. In case if the imbalance is detected, the rotation speed starts being controlled in such way to evenly redistribute laundry in the drum, and thus reduce vibration.



Child lock: some models are fitted with a device to lock the programme/cycle so it cannot be accidentally changed.



Cold Wash: a programme designed for the effective washing of moderately soiled garments at low temperatures. Thanks to a specially developed washing algorithm, it delivers excellent cleaning results while helping preserve fabrics, colours and energy efficiency.



30 cm: Large loading hatch of 30-32-33 cm in diameter, makes laundry loading and unloading easier and faster with maximum ease of use.



This shows the amount of laundry that can be inserted into the tumble dryer in KG.



Easy Iron: this is an option which can be selected to ensure the finished laundry is left with less creases to make ironing easier.



Autocleaning system: Autocleaning system avoids the formation of lint and impurities inside the condensation system ensuring maximum reliability of the machine.

B: Product energy rating, measured from A+++ to D / G depending on the product family.



Delay timer: can be set to run the programme at a convenient time or to take advantage of off-peak energy periods.



LED display: to show programmes, functions and options selected and the time to the end of the cycle.



Gentle drying: program designed to get laundry ready for easy ironing.



This option advises when the periodic cleaning of the filters is needed, in order to avoid forgetfulness and thus guarantee the perfect functioning of the dryer over time. The convenient position of the filters makes maintenance fast and extremely simple.

FlexiTime: The FlexiTime option allows the user to reduce the time of the cycle selected, providing extra flexibility and control.

Intensive option: this function extends the duration of the wash cycle and increases the intensity of the wash, ensuring a deeper cleaning for heavily soiled garments.

Prewash: program designed for heavily soiled garments.

Cotton: programme designed for washing medium to heavily soiled cotton garments, ensuring thorough and effective cleaning.

Delicate: Clothing such as underwear, hosiery and luxury fabrics should be dried on the delicate cycle to help extend the life of the clothing.

Program designed for clothes that have to be stored or used immediately.

Mixed fabrics: this cycle is designed for lightly soiled laundry in a mix of cottons and synthetics, or can be used just to refresh stored items.

Quick 15 min.: ideal for small loads of lightly soiled garments, it guarantees a fast wash in a very short time.

Rinse and Spin: this programme is suitable for rinsing and spinning garments.

Sport: programme designed to quickly wash sports and technical clothing, which undergo frequent washes, ensuring optimal hygiene and protection of the fibres.

Humidity sensor: allows to adjust dryer to obtain the desired drying level (Iron dry, Cupboard dry and Extra dry), saving time and reducing energy consumption. In addition, manual adjusting allows you to program drying time according to your preferences.

No spin option: this option allows to exclude the last spin phase, draing the water from the tank

Cleaning programme: A cleaning programme has been created to maintain the performance of washer/dryers. The display shows automatically when cleaning is required.

Eco 40-60: reference programme defined by EU regulations for measuring the energy performance of washing machines. Ideal for normally soiled cotton garments washable at 40 °C or 60 °C, it provides an excellent balance between cleaning performance and savings, although it requires a longer washing time.

To drain the water in the machine.

Extra Rinse: Extra Rinse: adds an extra rinse cycle to that already provided in the program chosen, to remove any residual detergent. This function is particularly suitable for those with allergies or skin problems.

Night: an ideal programme for those who want to take advantage of off-peak energy periods, this cycle is particularly quiet due to slower rotations of the drum.

Super fast: a programme designed to wash small amounts of laundry fast, ideal for washing lightly soiled garments.

Shirts: Specific program that allows you to wash shirts with the utmost attention. The addition of steam at the end of the cycle ensures a reduction in the formation of creases and ironing times.

Synthetics: programme designed for synthetic and mixed-fibre fabrics. Ideal for lightly to normally soiled garments, it uses moderate temperatures and a gentler washing action to protect the fibres and reduce creasing, ensuring effective cleaning without stressing the materials.



Wool: this programme for wool or delicate fabrics uses slower rotations of the drum to ensure the utmost care for clothing.



Drum has maximum capacity of 7kg of dry laundry.



Volumeplus: Smeg offers models with load up to 8 kg, while maintaining the best washing results, and providing low energy consumption.